주문시 확인 승낙 사항
Items to be verified and approved when ordering products

운영 제품을 구입하는 고객 여러분께 !

저희 운영 제품을 애용해 주셔서 대단히 감사합니다.
본 카달로그에서 당사 제품을 주문하실 경우, 견적서, 계약서, 사양서 등에 특기사항이 없는 경우에는 다음의 적합 용도조건, 보증내용등을 적용합니다. 아래 내용을 확인하시고 승낙하신 후 주문해 주십시오.

1. 보증 내용

① 보증기간
당사 제품의 보증기간은 구입 후 또는 지정 장소 납입 후 1년으로 합니다.

② 보증 범위
상기 보증 기간 중에 당사측의 책임으로 당사 제품에 고장이 발생한 경우 대체품 제공 또는 수리를 제품 구입 장소에서 무상으로 실시합니다. 단, 고장의 원인이 다음에 해당하는 경우에는 이 보증 대상 범위에서 제외됩니다.
a) 본 카달로그 또는 사양서에 기재되어 있는 이외의 조건, 환경, 취급 및 사용에 의한 경우
b) 당사 제품 이외의 원인에 의한 경우
c) 당사 이외에 의한 개조 또는 수리에 의한 경우
d) 당사 제품의 본래 사용법 이외의 사용에 의한 경우
e) 당사 출하 당시의 과학, 기술 수준으로는 예측 할 수 없었던 경우
f) 기타 천재지변, 재해 등 당사측의 책임이 아닌 원인에 의한 경우
참고로 여기서의 보증은 당사 제품 단품의 보증을 의미하는 것이며, 당사 제품 고장에 의해 유발되는 손해는 보증 대상에서 제외됩니다.

2. 책임의 제한

① 당사 제품에 기인해 발생한 특별손해, 간접손해, 또는 소극적 손해에 대해 당사는 일체의 책임을 지지 않습니다.
② 프로그래밍 가능한 당사제품에 대해 당사 이외의 자가 실시한 프로그램 또는 그에 의해 발생한 결과에 대해 당사는 일체의 책임을 지지 않습니다.

3. 적합 용도의 조건

① 당사 제품을 다른 제품과 조합해서 사용하는 경우에 적합해야 할 규격, 법규 및 규제는 고객이 직접 확인해 주십시오.
또 고객이 사용하시는 시스템, 기계, 장치에 대한 당사제품의 적합성은 고객이 직접 확인해 주십시오.
이것이 실시되지 않는 경우 당사는 당사 제품의 적합성에 대해 책임을 지지 않습니다.

② 다음 용도에 사용하는 경우, 당사 영업 담당자와 상담하고 사양서 등을통해 확인하는 한편 정격, 성능에 대해 여유를 주거나 만일 고장이 발생해도 위험을 최소화 할 수 있는 안전 회로 등의 안전 대책을 2중으로 강구해 주십시오.
a) 실외, 잠재적인 화학적 오염 또는 전기적 방해를 받는 용도 또는 본 카탈로그에 기재되지 않는 조건이나 환경에서 사용.
b) 원자력 제어설비, 소각설비, 철도, 항공, 차량설비, 의료용 기계, 반도체 제조장비, 오락기계, 안전장치 및 행정 기관 이나 개별 업계의 규제에 따른 설비
c) 인명이나 재산에 위험이 미칠 수 있는 시스템, 기계, 장치
d) 가스, 수도, 전기의 공급 시스템, 24시간 연속 운전 시스템 등 높은 신뢰성이 필요한 설비
e) 자동차(2륜차 포함) 탑재 설비
f) 기타상기 a)~e) 에 준하며 고도의 안전성이 필요한 용도

③ 고객이 당사 제품을 인명이나 재산에 중대한 위험을 미치는 용도에 사용하는 경우에는 시스템 전체적으로 위험을 알리거나 여유 있는 설계에 의해 필요한 안전성을 확보할 수 있도록 설계되어 있는지 당사 제품이 전체적으로 의도한 용도에 적절히 배전, 설치 되어 있는지 반드시 고객이 직접 사전에 확인해 주십시오.

④ 본 카달로그에 기재되어 있는 용도는 참고용이므로 채택 시에는 기기, 장치의 기능과 안전성을 확인 한 후에 사용해 주십시오.

⑤ 당사 제품의 잘못된 사용으로 고객 또는 제 3자에게 예기치 않는 손해가 발생하지 않도록 사용상의 금지 사항 및 주의 사항을 완전히 숙지 한 후 반드시 지켜 주십시오.

4. 사양변경

본 카달로그에 기재된 제품의 사양 및 동봉품은 개선 또는 기타 사유에 의해 필요에 따라 변경될 수 있습니다.
당사 영업 담당자와 상담하고 당사 제품의 실제 사양을 확인해 주십시오.

5. 서비스의 범위

당사 제품의 가격에는 기술자 파견 등의 서비스 비용은 포함되어 있지 않습니다.
원하실 경우에는 당사 영업 담당자와 상담해 주십시오.

6. 적용 범위

상기 사항은 대한민국 내에서의 거래 및 사용을 전제로 합니다.
해외에서의 거래 및 사용에 대해서는 당사 영업 담당자와 사전에 상담해 주십시오.

Dear customers who purchase Woon Young products!

Thank you for purchasing Woon Young products.
If there is no particular information on estimates, contracts or specifications when you order products from this catalog, the following conditions of use and warranty shall apply. Please place orders after you read and approve the following items.

1. Content of Warranty

① Warranty period
The warranty period of this product shall be 1 year from the date of purchase or from the day the product is delivered to a designated place.

② Scope of warranty
If failure occurs due to reasons attributable to this company during the above-said warranty period, this company will provide substitute products or repair the product free of charge at the place of purchase. However, if the cause of failure is one of the following, it shall be excluded from being eligible for warranty benefits.
a) Products were handled or used under the conditions and environmnt not entered in this catalog or in specification.
b) Failure occurred due to reasons other than those caused by this product.
c) Failure occurred due to modification or repairs performed by persons other than this company.
d) Failure occurred because the product was used based on the method other than the original usage of this product.
e) Failure was not expected by the scientific and technical levels prevailing at the time of shipment.
f) Failure occurred due to causes beyond the control of this company, e.g. natural disasters and accidents.
Warranty as specified herein means the warranty covering only the product of this company, and any damage caused by the failure of this product shall be excluded from being eligible for warranty coverage.

2. Limitations on responsibility

① This company shall not be held liable whatsoever for any special damage, indirect damage or passive damage caused by this product of this company.
② This company shall not be held liable whatsoever for any programming performed by persons other than this company on the programmable products or for the results of such programming.

3. Conditions of compatibility

① Please check the standards, laws and regulations applicable when this product is used in combination with other products.
In addition, be sure to check the compatibility of this product covering the systems, machines and devices used by you.
If you fail to take actions as above, this company shall not be held liable for the compatibility of the product.

② If the product is used for the following purposes, discuss details with the sales manager of this company based on the provided specifications. At the same time, allow sufficient rating and performance, or take appropriate safety measures through the safety circuits that can minimize risks even if failure occurs.
a) Using the product outside or under environment exposed to potential chemical pollution or electric interference, or using the products under the conditions or environment not specified in this catalog.
b) Nuclear controllers, incinerators, railways, aviation, vehicles, medical equipment, semiconductor manufacturing equipment, game machines, safety devices and equipment regulated by administrative agencies or individual maker.
c) Systems, machines and devices that can cause personal or property damage.
d) Equipment requiring high degree of reliability, e.g. gas, water and electricity supply systems, and 24-hour continuous operation systems.
e) Automobile (Including two-wheeled vehicles) mounted equipment
f) Other purposes equivalent to the above-said paragraph a) through e) requiring high degree of safety.

③ If the product is used for purposes that might induce serious personal or property damage, be sure that you inform risks covering the entire system in advance or verify whether the product is designed to ensure required safety or whether the product is properly connected and installed to suit the intended overall purposes

④ The purposes of the products shown in this catalog are only for reference purposes. Apply such purposes only after you check the functions and the safety of the equipment and devices.

⑤ To prevent unexpected damage to you or to third parties resulting from improper use of this product, be sure to use the product after you thoroughly read and understand items related to prohibitions and caution during use.

4. Changing specifications

The products and specifications entered in this catalog are subject to change as needed for improvement or for other reasons. Discuss with the sales manager of this company and verify actual specifications of the products.

5. Range of service

The product prices do not contain any service expenses, e.g. dispatch of technicians. If you need any services, discuss with the sales manager of this company.

6. Scope of application

Items described above are on the premise that the products are traded and used in the Republic of Korea. Discuss with the sales manager of this company regarding overseas transactions and uses.

GUIDELINES FOR SAFETY

안전을 위한 주의사항 Guidelines for Safety

- **"안전을 위한 주의사항" 은 제품을 안전하고 올바르게 사용하여 사고나 위험을 미리 막기 위한 것이므로 반드시 지켜 주십시오.**
- **주의사항은 "경고"와 "주의"의 두 가지로 구분되어 있으며 "경고" 와 "주의"의 의미는 다음과 같습니다.**

⚠ **경고** 지시사항을 위반하였을 때 심각한 상해나 사망이 발생 할 가능성이 있는 경우입니다.

⚠ **주의** 지시사항을 위반하였을 때 경미한 상해나 제품손상이 발생할 가능성이 있는 경우 입니다.

- 제품과 사용설명서에 표시된 ⚠ 그림기호의 의미는 특정 조건 하에서 위험이 발생 할 우려가 있으므로 주의하라는 기호입니다.

⚠ 경 고

1. 인명이나 재산상에 영향이 큰 기기 (예: 원자력제어, 의료기기, 차량, 철도, 항공, 연소장치, 오락기기 등 또는 안전장치)에 사용할 경우 반드시 2중으로 안전장치를 부착한 후 사용하여 주십시오.
- 화재, 인명사고, 재산상의 손실이 발생할 수 있습니다.

2. 반드시 패널에 취부 하여 사용하시고 FG 또는 ⏚ 단자는 접지하여 주십시오.
- 감전의 우려가 있습니다.

3. 전원이 인가된 상태에서 결선 및 점검, 보수를 하지 마십시오.
- 감전의 우려가 있습니다.

4. 자사 수리기술자 이외에는 제품을 개조하지 마십시오.
- 감전이나 화재의 우려가 있습니다.

5. 입력 전원사양을 반드시 확인하시고 전원 연결 시 반드시 단자번호를 확인하시고 연결하십시오.
- 화재의 우려가 있습니다.

6. 전원을 차단한 직후에 부하측 단자를 만지지 마십시오.
- 감전의 우려가 있습니다.

⚠ 주 의

1. 실외에서 사용하지 마십시오.
- 제품의 수명이 짧아지는 원인이 되며 감전의 우려가 있습니다.

2. 전원 및 부하배선 연결 시에는 부하전류에 따른 전선의 굵기에 유의하여 주십시오.
- 전류에 비하여 전선의 굵기가 가늘면 화재의 위험이 있습니다.

3. 단자대의 나사는 규정토크로 조여 주십시오.
규정토크(TORQUE) M3.5: 0.6~1.2N(6~12kgf.cm), M4 : 1.3~1.5 N(10~14Kgf.cm), M5: 2.1~3.0N(21~30kgf.cm), M8:10.6~12.5N(108~127kgf.cm), M12: 35.7~42N(364~428kgf.cm) M14: 57.8~68N(590~693kgf.cm)
- 나사가 풀리면 접촉불량으로 화재의 우려가 있습니다.

4. 반드시 정격과 성능 범위내에서 사용하여 주십시오.
- 제품의 수명이 단축되고 고장 발생의 원인이 됩니다.

5. 청소시 물, 유기용제 등의 사용을 금합니다.
- 감전 및 화재와 제품변형의 우려가 있습니다.

6. 가연성가스, 폭발성가스, 습기, 직사광선, 복사열, 진동, 충격이 있는 장소에서의 설치 및 운전을 금합니다.
- 제품수명단축 및 고장, 화재, 폭발의 위험이 있습니다.

7. 제품의 내부로 먼지나 배선찌꺼기 등의 유해한 도체가 유입되지 않도록 하여 주십시오.
- 고장 및 화재의 우려가 있습니다.

8. 제품 사용시 환기되지 않는 밀폐된 곳에서 사용하지 마십시오.

9. 동작 중 방열판류에는 고열이 발생하므로 절대 만지지 마십시오.
- 감전 및 화상의 우려가 있습니다.

10. 제품폐기 시에는 산업폐기물로서 처리하여 주십시오.

- Guidelines for safety is to use product safe and properly and prevent accidents or dangers. Never forget to keep it.

- Guidelines can be classified into two, warning and caution, and their meanings are as follows.

⚠ **Warning** When there is the possibility that serious injury or death can occur when violating directions.

⚠ **Caution** When there is the possibility that slight injury or the damage of products can occur when violating directions.

- The meaning of ⚠ lexigram indicated on the products and instructions is to handle with care as any danger can occur under specific conditions.

⚠ Warning

1. When using in instruments that have great influence on lives or properties(for examples: nuclear energy control, medical equipment, vehicles, railroad, aviation, combustion apparatus, entertainment systems or safety device), use after being sure to attach duplex safety device.
   - There may be fire, loss of lives, or property damages.
2. Use after being sure to attach to panel, and ground FG or ⏚ terminal.
   -There may be the possibility of electric shock.
3. Don't connect, inspect and repair under the power-up.
   -There may be the possibility of electric shock.
4. Don't remodel products except by the company's engineers.
   -There may be the possibility of fire or electric shock.
5. Be sure to check input power source options, and connect after checking terminal number when connecting power sources.
   -There may be the possibility of fire.
6. Don't touch the terminal of load side immediately after power source is cut off.
   -There may be the possibility of electric shock.

⚠ Caution

1. Don't use outdoors (for outdoor, separate order)
   -It can be a cause of product's life becoming short, and there may be the possibility of electric shock.
2. When connecting power source and load wiring, pay attention to the thickness of cables according to load current.
   -There may be the danger of fire if the thickness of cables is small for the current.
3. Tighten the screw of port by the regulated torque.
   The regulated torque - M3.5 : 0.6~1.2N(6~12kgf.cm), M4 : 1.3~1.5 N(10~14Kgf.cm), M5 : 2.1~3.0N(21~30kgf.cm) M8 : 10.6~12.5N(108~127kgf.cm), M12 : 35.7~42N(364~428kgf.cm), M14 : 57.8~68N(590~693kgf.cm)
   -If the screw comes loose, there may be the possibility of fire because of bad contact.
4. Be sure to use within the range of rating and performance.
   -Product's life is shortened, and it may be a cause of troubles.
5. Don't use water or organic solvent when cleaning.
   -There may be the possibility of electric shock, fire and product deformation.
6. Don't install or operate in places with inflammable gas, explosive gas, direct ray of light, radiation heat, vibration and shock.
   -There may be the possibility of troubles and fire.
7. Make sure that harmful conductors such as dust or fragments of cables may not be flowed into the inside of product.
   -There may be the possibility of trouble or fire.
8. Don't use this product where closed and not ventilated place
   - It may cause a fire and the damage to product.
9. Never touch during operation as there is superheat on the radiator board.
10. Dispose as industrial waste when discarding products.

스위칭전원장치
Switching Mode Power Supply





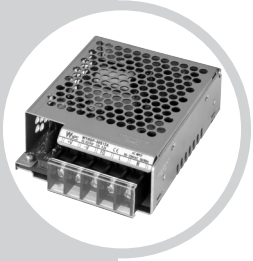



기술적 설명(Technical Description) ····· 368

결선도(Connection) ····· 376

용량별요약일람표(Selection Guid) ····· 377

1CH DIN Rail Type
D TYPE 10~100W ····· 384
DP TYPE 75~500W ····· 392
DD TYPE 10~500W ····· 400
DB TYPE 10~150W ····· 416

1CH Din & Terminal Type
NSP TYPE 10W~300W ····· 424
NSP 역률개선용(PFC) TYPE 75W~300W ····· 446
SP TYPE 15W~1500W ····· 460

2CH, 3CH Type
2CH 15W~75W ····· 504
3CH 15W~50W ····· 513
병렬형 다이오드 모듈(Diode Module) ····· 518

1. 일반적 기능 및 특징 General Function And Characteristics

1. S.M.P.S 는 AC 전원을 변환 필요한 DC 전원으로 공급하는 장치로서 당사에서는 플라이 백 방식 (15Watt, 30Watt, 50Watt, 75Watt) 포워드컨버터방식 (100Watt, 150Watt, 200Watt) 하프브리지방식 (300, 600, 풀브리지 방식 (1500Watt)등을 사용한 제품을 생산하고 있습니다.

2. 주재료 및 부품은 U/L 및 CSA규격에 만족하도록 규격품 또는 동등 품이 사용되어 진동 및 충격에 견딜 수 있도록 견고하게 부착되어 있습니다.

3. P.C.B 는 FR4, 1.6T 를 사용했으며 내,외부 방열판 및 케이스는 방열효과가 뛰어난 특수 알루미늄으로 제작되어 있으며 자연대류에 의한 방열이 가능하게 설계되어 있습니다. (300Watt 이상은 강제방열)

1. S.M.P.S is the divice which supplies the necessary DC source by converting AC source, we produce it by using three methods flyback method(15Watt, 30Watt, 50Watt, 75Watt) forward convertor method(100Watt, 200Watt) and half bridge method(300, 600, 1500Watt), Full bridge type (1500Watt)

2. We use standardized goods or the same level as the main raw-material and components of for products they are not only up to U/L or CSA standard but also attached good to endure vibration and shocks.

3. We use FR4, 1.6t for P.C.B and the inside and outside heat- sink and case are made of a particular aluminum very strong against heat. We designed them for protection against heat by natural convection cooling. (When more then 300Watt it is protected against heat by forced air cooling)

2. 전기적 특성 Electrical Characteristics

1. 입력조건 (Input Condition)

1) 입 력 전 압 : Free voltage, Selector type 등이 있습니다.

1) Input Voltage : There are two type of input voltage ,Free voltage, and selector type

INPUT TYPE	MODEL (OUTPUT WATT)	REMARK
FREE VOLTAGE	15WATT, 30WATT, 50WATT, 75WATT,600W PFC	85 ~ 264VAC
SELECTOR	100WATT 이상제품	85 ~ 132VAC 170 ~ 264VAC 선택

※ 각 제품마다 입력전압에 관한 경고문이 부착되어 있습니다. 기타 주문품은 제외됩니다.

※ Every product contains a warning label about input voltage ,excepting goods ordered.

(Fig1)

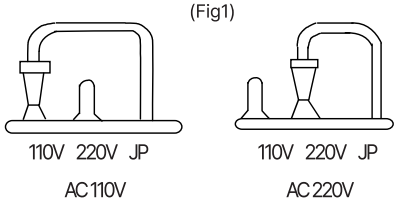

2) 전 원 입 력

"WYES"전원장치는 AC 입력조건이 2종류가 있으며 15W ~ 75W, 600W PFC 까지는 Free Voltage 형식의 AC 85 ~ 264V를 사용할 수 있습니다. 100W 이상에서는 내부 PCB에 절체 콘넥터 또는 절환 스위치를 필요한 전원 AC 85~132V 는 110V 단자에 AC 170 ~ 264V는 220V 단자에 삽입하면 전원 전압이 절환됩니다.

2) Power Input :

"WYES"15W ~ 75W power supply works on free voltage in AC85 - 264V 100WATT and over power supply works in the selected voltage by inner jumper or switch. See the figure1.

3) 입 력 전 류

당사제품은 교류입력을 직접 정류하는 콘덴서입력 형이므로 평활콘덴서에 무효전류가 흐릅니다. 이로인하여 입력전류는 다음 계산식으로 계산됩니다.

$$I\ in = \frac{P\ out}{V\ in \times COS\theta \times \eta}$$

I in : 입력전류 (Input current) V in : 입력전압(Input voltage),
P out : 전력 (Electric Power)
COSθ : 역율(Power factor) η : 효율(Efficiency)

일반적으로 역율은 0.4~0.6 정도이며 AC110V 입력 100% 부하시 60% AC220V 입력 100% 부하시 70% 이상입니다.

3) Input Current :

Our product is a condenser input type rectifying for alternating current input directly there flows reactive current in smoothing condenser. Thus input current is calculated by above calculation formula

4) 입력돌입전류

입력투입시 입력 평활콘덴서에 충전 Peak전류가 흐르며 정상상태의 입력전류에 비하여 수배에서 수십 배입니다. 입력선의 Fuse 및 스위치는 이것을 감안하여 선택하여야 합니다. 당사제품은 입력 220VAC, 출력 최대 부하 전류의 상태에서 전원 투입시 돌입전류는 30A이하이며(입력전압 위상각 : 90°, 270°) 주기평균 전류는 15A입니다.

4) Inrush Current :

A charging peak current flows in input smoothing- condenser when input is projected and the ammount of it is up to several times to ten times compared to input current of normal operate. You should consider this when choosing fuse or switch of input wire. Our products are input 220VAC and the rush current is under 30A.

5) 입력 Fuse

제품에 내장되어 있는 Fuse 가 단선(Open) 되었을 때는 내부회로 및 소자에 이상이 발생되어 있으므로 Fuse 교환으로는 복구는 불가능할 경우가 있습니다. 이 때는 당사 A/S 조치를 받아야 합니다. 당사의 A/S보증기간은 1년입니다.

(Fig2)

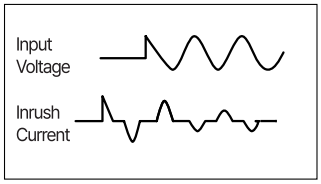

5) Input Fuse :

When the fuse in product open, there would be trouble with internal circuit or element. Sometimes it's unable to recover just by changing fuse you should have our A/S . Our A/S period is 1 years is guaranteed.

6) 입력전압 변동율
최대출력부하 상태에서 입력전압을 변동시 (85~264VAC) 출력전압은 ± 0.4% 이하의 변동율을 보입니다.

7) 연속 On/Off
220V입력, 최대출력부하에서 입력전원 On/Off 를 5초 간격으로 10회 이상 실시하여도 출력의 변화는 없습니다.

6) Input Voltage Regulation
When input voltage is changed (85~264VAC) under maximum output load regulation of output voltage is under ±0.4%.

7) Continuous On/Off
If you practice input voltage ON/OFF over 10 times every 5 seconds, there will be no change in output.

2. 출력조건 (Output Condition)

1) 출력전압 가변범위

MODEL	CH1	CH2	CH3	단출력(sigle output)
15 WATT	5%	X	X	±10%
30 WATT	5%	10%	X	±10%
50 WATT	5%	10%	X	±10%

※ 출력전압은 공장출하 시 조정되어 있으므로 가급적 조정없이 사용하여야 하나 꼭 필요시는 출력전압의 2% 내에서 조정 하여 사용하시기 바랍니다.

2) 과전압 보호(O.V.P)
출력전압이 정격을 기준이상 초과하면 O.V.P가 작동하여 자동적으로 출력이 차단됩니다. 부하(원인) 제거 후 입력을 재투입 시키면 제품의 이상이 아닐 경우 재 동작합니다.
※ O.V.P 전압은 고정이므로 변경은 당사에서만 가능합니다.

3) 과전류 보호(O.C.P)
출력부하가 정격을 기준이상 초과하면 (Short등) 출력은 자동적으로 차단되며 출력이 정상상태가 되면 자동복귀합니다. (출력단락 보호)

4) 잡음 (Ripple Noise)
Ripple Noise의 측정은 부하의 유무에 관계없이 전원의 출력단자에서 행해지며 Osilloscope Probe 양단에 0.1μF Film 컨덴서와 47μF전해 콘덴서를 병렬로 연결하여 측정 할 수 있습니다. 당사제품의 Ripple noise는 출력전압 ×1%+ 50 (DC100MHz) m Vp-p 이하입니다.

5) 출력 (Output)
출력전력은 주위온도에 따라 달라지므로 주의하시기 바랍니다. 당사제품의 온도(주변환경온도) 에 따른 출력은 주변환경 온도 50°C 에서는 50%, 70°C에서는 30%이내로 경감하여 사용하시기 바랍니다.

1) A variable extent of output voltage

※output voltage is adjusted when the product is sent out , you had better use it without adjust. But when adjust is needed it should be restricted to 2% of output voltage.

2) O.V.P
When output voltage surpasses the standard O.V.P operates to cut off it automatically. If you Project input again after elimination the load (the cause). It will operate again excepting the condition of intral product problem.
※O.V.P voltage is fixed you should come our factory for changing it.

3) O.C.P
When output load surpasses the rating, output is shut down automatically, and when output becomes normal state it comes back automatically. (Output short circuit protection)

4) Ripple Noise
Measurement of ripple noise is done in output terminal of power regardless of the load, you connect 0.1μF condenser with 47 μFelectrolytic condenser in a parallel way to both ends of osilloscope probe.
Ripple noise of our product is under output voltage 1% +50(DC100MHz)mVp-p.

5) Output
You should notice that output power derating according to the temperature of surroundings. Thus you should use our product after derating, output in the extent of 50% when the temperature is 50°… and 30% when the temperature is 70℃

3. 절 연 (Insulation)

1) 절 연 저 항 (Insulation Resistance)
입력 : 케이스, 출력 : 케이스, 입력 : 출력간 - DC 500V 절연저항계로 100M ohm 이상

2) 절 연 내 압 (Insulation Withstanding Voltage)
입력 : 케이스, 입력 : 출력 - AC 1,500V/10mA 60초, 출력 : 케이스 - AC500V/10mA 60초

1) Insulation Resistance - Input : Case, Output : Case , Input : Output - AC 500V Megger Over 100M ohm.

2) Insulation Withstanding Voltage - Input : Case, Input : Output - AC1,500V/10mA 60S. Output : Case - AC500V/10mA 60S.

4. 실 장 (Mount)

1) 자 연 방 열

S.M.P.S 는 방열에 따라 효율의 차이가 크므로 통풍 및 방열에 주의하여야 합니다. 특히 여러 대를 동시에 사용할 경우에는 충분한 간격을 유지해야 합니다.

2) 강 제 방 열

FAN 이나 기타 강제방열 장치를 사용하며 효율을 높일 수 있습니다.

3) 취 부

배면 및 측면취부가 가능하며 별도의 취부용 Bracket 가 있습니다.

1) Natural Cooling Against Heat :

S.M.P.S shows very different effectiveness depending on conditions of protection against heat.You must take care of ventilation and cooling against heat. Especially when you use more than one S.M.P.S you should keep enough space among them respectively

2) Forced Air Cooling Against Heat :

You can promote the effectiveness by using fan or other devices of forced air cooling against heat

3) Mounting :

Back side or side hanged is possible and there is extra bracket for hanged.

5. 입출력 단자 배선 (Input and Output Terminal Wiring)

1) 입력측의 외부 Source 전압이 출력측에 유도되지 않도록 입력선과 출력선은 반드시 분리하여 배선하여야 합니다.

2) 출력선은 짧게 꼬아서 사용하시면 노이즈감쇄 효과가 있습니다.

3) 출력측에 소용량의 콘덴서를 부착하면 노이즈감쇄 효과가 있습니다.

4) FG 단자는 안전 및 Noise 방지용이므로 접지에 고정하여야 하나 샤시GND를 사용하고 있을 경우에는 별도의 대책이 필요 없습니다.

1) You should distribute wires separately, if not the outside surge voltage of input part will lead to output part.

2) If you use it in output part by twisting short there will be noise-reduction effect.:

3) If you attach a small capacity condenser, there will be a noise-reduction effect.

4) You had better fix FG terminal to GND, because it's use is for security or protection against noise, but in case you are using chassis GND, you don't need to consider a counter plan

6. 수명 및 주위온도 (The Expected Life Span And The Temperature of Surroundings)

S.M.P.S 는 주위온도에 따라 수명이 극단적으로 변합니다. 특히 전해콘덴서의 경우 주위온도가 10°C 높아지면 수명이 1/2 로 감소하는 특성이 있어서 제품의 모든 콘덴서는 105°C(입력전류콘덴서제외)를 사용하고 있으므로 각 콘덴서 Catalog 온도/사용시간 그래프를 참조하시기 바랍니다.

당사제품은
동작온도 – 10°C ~ 50°C
보관온도 – 20°C ~ 85°C
습 도 – 30% ~ 85% 의 조건을 만족합니다.

The expected life of S.M.P.S changes depending upon the temperature of surroundings . Especially as to electrolytic condenser, the expected life tends to be reduced to 1/2 as the temperature of surroundings rises 10°C more the temperature has a fatal effect on the life all our condenser are used in 105°C except smoothing condenser.we recommend that you should refer to The temperature/ operating period graph of each condenser catalog.

Our products satisfy following conditions
Operation temperature - 10°C~ 50°C
Storage temperature - 20°C ~ 85°C
Humidity - 30°C ~ 85°C

7. 라이프 사이클과 고장 (Life Cycle and Trouble)

아래의 그림은 고장율 곡선이라 부르는 제품의 라이프사이클을 나타내는 표의 대표적인 것입니다.

Following figure show you failure rate curve, express life cycle of product.

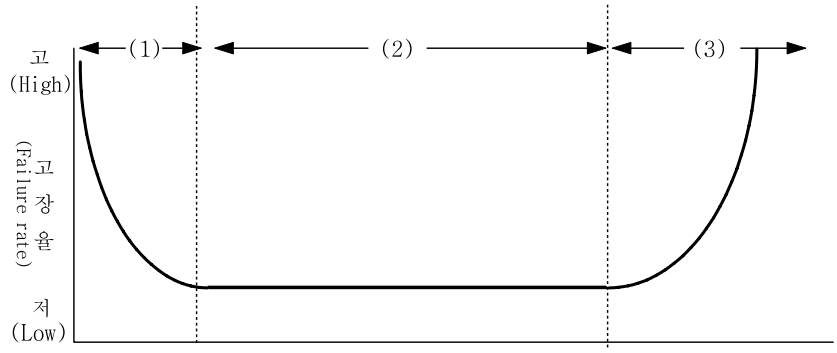

사 용 시 간 (Operating Period)

1) 초기고장기간

제조 회사에서는 초기고장을 방지하기 위하여 부품을 엄선하고 조립 후에는 Aging을 하고 출하합니다. 따라서 출하후에는 우발고장 기간에 있습니다.

2) 우발고장기간

이 기간에 발생하는 고장은 사용자 측에서의 설치조건 (주위온도, 취부방법,통풍, 진동 등) 에 크게 기인합니다.

3) 마모고정기간

이기간은 부품의 기대 수명이 다되서 고장 발생 최소 기간입니다.
제품의 교체가 필요한 기간입니다.

1) Initial Trouble Period :

Manufacturer select parts carefully for preventation of initial trouble time, so after assembly, aging enough and then ship goods. Therefore you use switching power in incidential trouble time.

2) Accidential Trouble Period :

If it goes wrong at this time,it is because for built in condition (Environment temperature, Mounting method, Ventilation, Vibration etc)

3) Wear thouble time

There is wear thouble time as time passes by.

8. SMPS 제품 설명 (Product Information)

1) 특 성 (Characteristic)

(주)운영의 SMPS는 창조적 기술개발로 종래의 개념을 초월한 각종 신소자를 도입하여 고성능, 고 신뢰성에 만전을 기한 제품입니다.

2) 특 징 (Features)

- 저가격
- 고효율
- 동종타사제품과 취부홀 공용
- 잡음단자전압 FCC CLASS B 규격기준
- 수직, 수평 취부가능
- 전원 실장상태로 COVER OPEN 내부점검 가능
- 광범위한 입력 전원사용
  - 15 ~ 75 WATT : AC85 ~ 264V Free voltage
  - 100 WATT 이상 : AC110/220V selectable by jumper.
- 돌입전류 보호 회로
- 과전류 보호 회로
- 과전압 보호 회로
- 저 잡음

1) Characteristic :

Woonyoung power supply series are the best products which these series units are used to secure high performance and reliability and are developed by creative technology. You would have the more valued power supply.

1) Features :

- Low price
- High efficiency
- The same mounting the similar unit of competitors.)
- FCC CLASS B
- Case covered mountable in either two side
- When power source attached possible inner test with cover opened
- Wide input range
  - 15 ~ 75 WATT : AC85 ~ 264V Free voltage
  - 100 WATT 이상 : AC110/220V selectable by jumper.
- Input inrush current protection)
- O.C.P - Over Current Protection
- O.V.P - Over Voltage protection
- Low noise

3) 수평 Bracket을 이용한 취부 방법 (Method of installing SMPS using horizontal bracket)

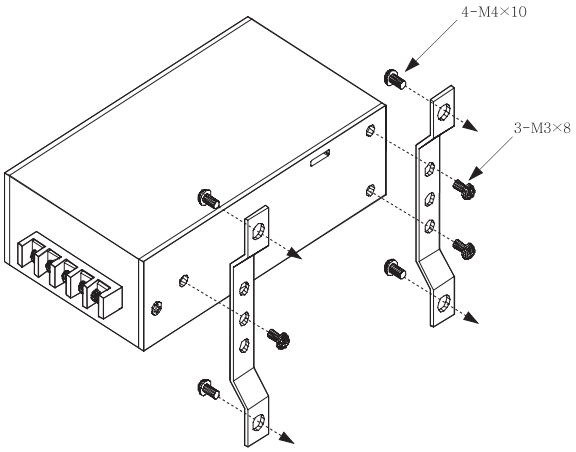

● 좌측 그림은 SMPS Bracket을 이용한 취부방식입니다
1) 각 제품에 적용되는 Bracket을 참조하여 선정 바랍니다.
2) Bracket의 고정은 좌측 그림과 같이 SMPS의 측면에 Bracket에 볼트를 이용하여 고정한 다음 희망하는 장소에 고정하십시오.
3) Bracket은 제품 구입시 문의 바랍니다.

● The figure on the left side shows a method of installing SMPS using brackets.
1) Refer to brackets that are used on many types of products.
2) As shown in figure on the left side, fix brackets on the side of SMPS with bolts in a desired place.
3) Inquire about brackets when you purchase products.

4) 수직 Bracket을 이용한 취부 방법 (Method of installing SMPS using vertical bracket)

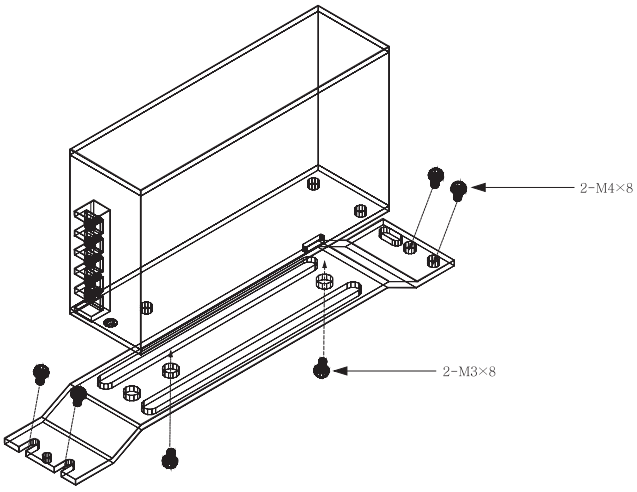

● SMPS의 수직취부는 그림과 같이 SMPS의 측면에 수직 Bracket을 볼트를 이용하여 고정한 다음 평탄한 바닥에 수직으로 취부합시오.

● To install SMPS vertically, put brackets vertically on the side of SMPS, fix it with bolts and install the product on a flat floor.

5) Din Rail Guide를 이용한 취부 방법 (Method of installing SMPS using Din－Rail)

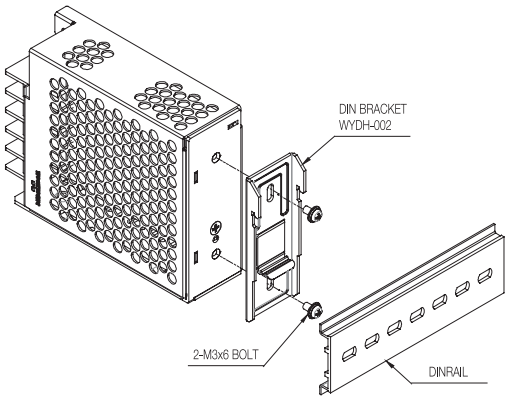

● 좌측 그림은 SMPS Din Bracket을 이용한 취부방식입니다
1) 각 제품에 적용되는 Bracket을 참조하여 선정 바랍니다.
2) Bracket의 고정은 좌측 그림과 같이 SMPS의 측면에 Bracket에 볼트를 이용하여 고정한 다음 Din Rail에 취부하시길 바랍니다.
3) Bracket은 제품 구입시 문의 바랍니다.

● The figure on the left side shows a method of installing SMPS using Din brackets.
1) Refer to brackets that are used on many types of products.
2) Using bolts, the bracket is fixed at the back side of SMPS as the figure on the left side. And install it at Din Rail.
3) Inquire about brackets when you purchase products.

5) Bracket 규격 및 적용제품 외형도 (Type & Dimension)

Part	Type	Dimension
WYBRK－H1  	WYSP－15W SERIES WYSP－30W SERIES WYSP－50W SERIES WYSP－75W SERIES WYSP－100W SERIES WYSP－150W SERIES WYSP－200W SERIES WYSP－250W SERIES WYSP－300W SERIES WYNSP－10/20W SERIES WYNSP－30/50W SERIES WYNSP－75/100W SERIES WYNSP－120/150W SERIES WYNSP－200/250/300W SERIES	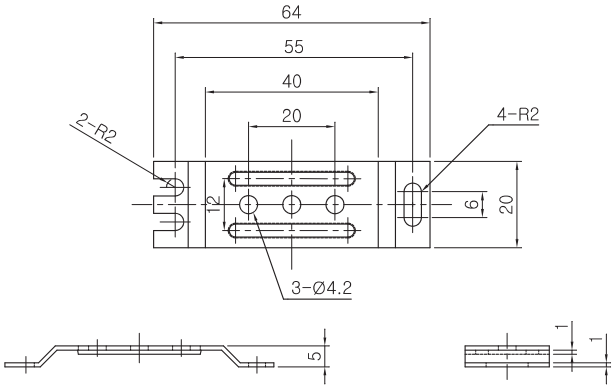
WYBRK－H2 	WYSP－500W SERIES WYSP－600W SERIES WYSP－750W SERIES	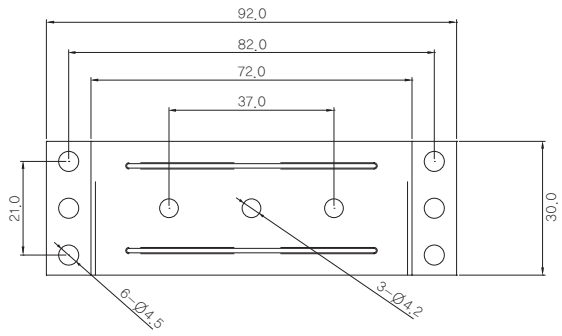
WYBRK－H3 	WYSP－1000W SERIES WYSP－1200W SERIES WYSP－1500W SERIES	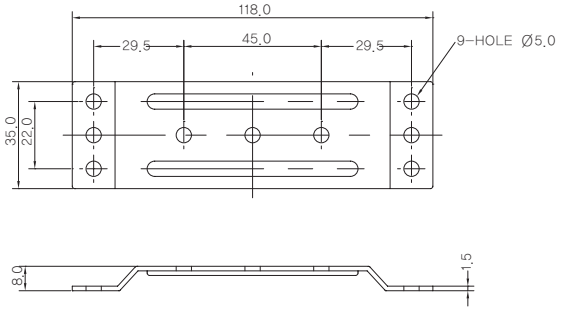
DIN Rail Type WYDH－002 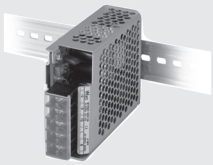	WYNSP－10/20W SERIES WYNSP－30/50W SERIES WYNSP－75/100W SERIES WYNSP－120/150W SERIES WYNSP－200/250/300W SERIES	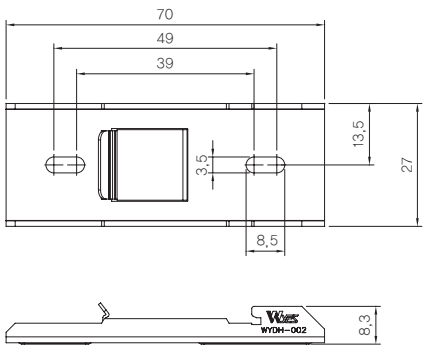 ※별도구매

12. Block Diagram

● Single Output 75W (10~75W)

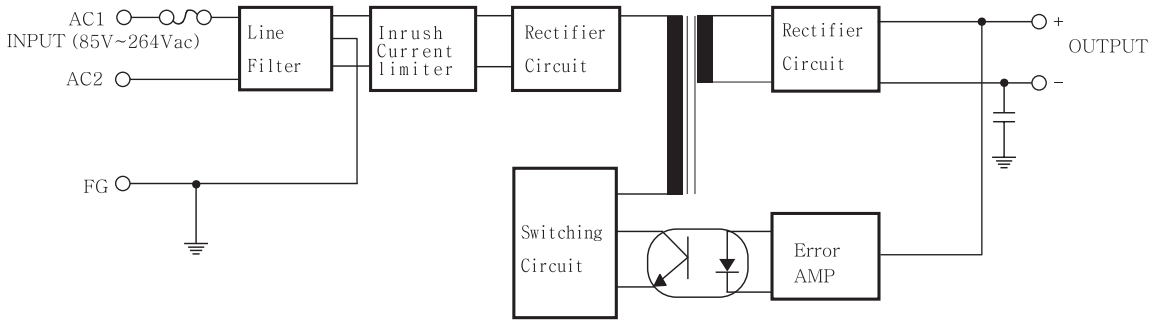

● Single Output 100W (100~250W)

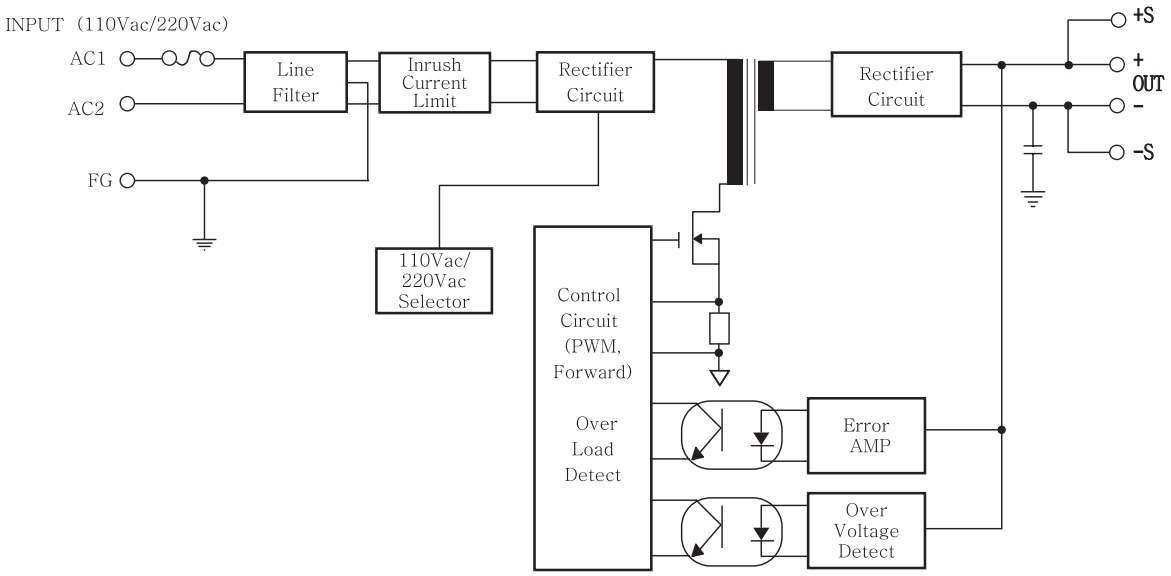

● Single Output 300W (300~1500W)

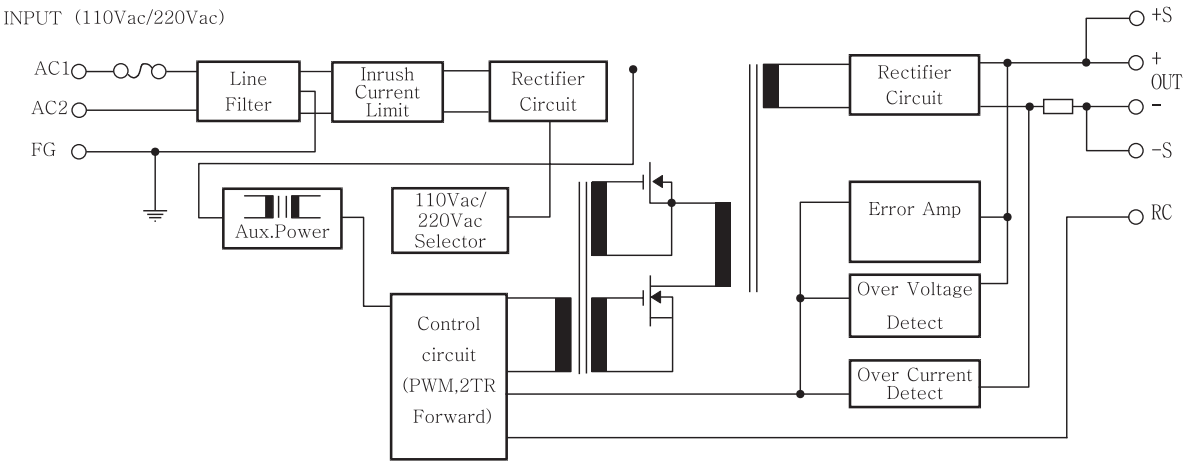

Dual Output

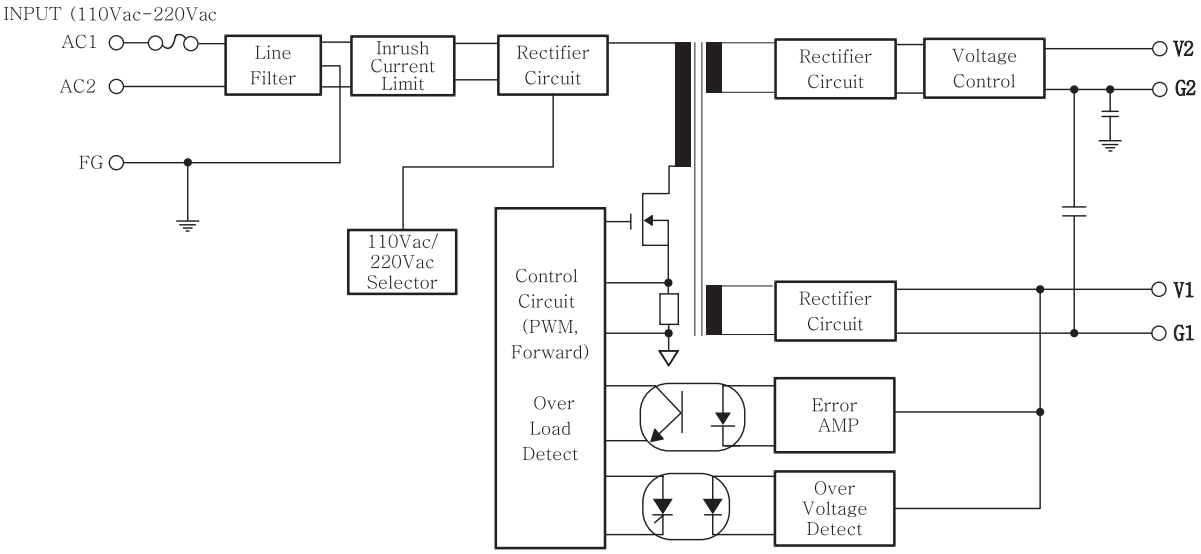

Triple Output

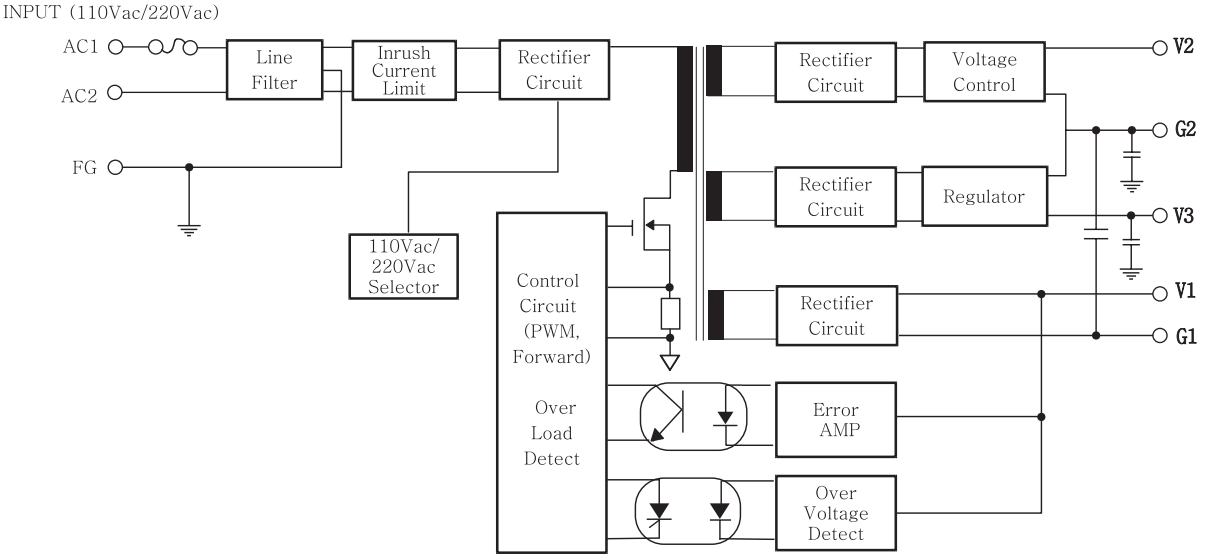

14. SMPS 병렬운전 (Pararrel Operation)

● Model : WYSP－1500S05HD

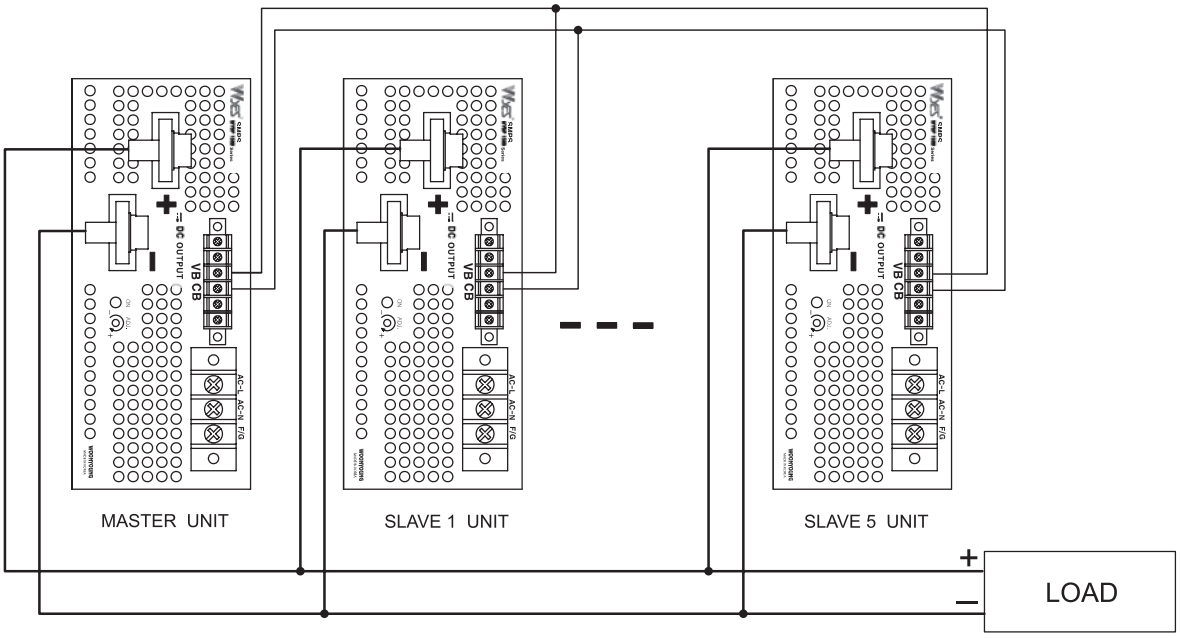

● 배선순서 :

1) 병렬운전 SMPS의 +,- 출력 배선을 최대한 부하측에서 합쳐지도록 배선합니다

2) 전압제어를 위한 VB(Voltage Balance)단자와 전류검출을 위한 CB(Current Balance) 단자를 SMPS 상호간에 연결해줍니다.

● 전압조정 :

1) Master Unit를 제외한 Slave Unit들의 전압조절기를 모두 시계방향 최대로 합니다.

2) 희망하는 전압이 되도록 Master Unit의 전압조절기를 조정합니다.

- 상기와 같은 병렬운전시의 최대 출력용량은 다음식과 같습니다.
  최대출력용량 = 0.8 x SMPS 대당출력용량 x 병렬연결대수
- 상기 제품의 병렬운전은 5대 까지 가능합니다.
- 상기 제품외의 SMPS 병렬운전은 당사로 문의 바랍니다.

● Connection

1) Connect wires in a way that the + and - output wiring of the SMPS operated in parallel can be combined to the maximum at the load side.

2) Connect the VB (Voltage balance) terminal used to control voltage and the CB (Current balance) terminal used to detect current between SMPS.

● Voltage adjustment

1) Turn all the voltage controls of the slave unit excluding master unit clockwise to the maximum.

2) Adjust the voltage control of the master unit to adjust voltage to a desired level.

- When the product is operated in parallel as above, the maximum output capacity is as shown in the following formula.
  Maximum output capacity = 0.8 × Output capacity per unit of SMPS × Number of equipment connected in parallel
- Up to 5 units of the product can be operated in parallel.
- For parallel operation of SMPS other than the products described above, inquire at this company.

10W - 300W Series [1CH WYNSP – Single Output]

Selection Guide

	MODEL	OUTPUT (V)	OUTPUT (A)	SAFETY STANDARDS	PAGE
10W	WYNSP-10S05A	5	2.0	CE	424
	WYNSP-10S12A	12	0.84	CE	
	WYNSP-10S24A	24	0.42	CE	
	WYNSP-10S48A	48	0.21	CE	
20W	WYNSP-20S05A	5	4.0	CE	426
	WYNSP-20S12A	12	1.67	CE	
	WYNSP-20S24A	24	0.84	CE	
	WYNSP-20S48A	48	0.42	CE	
30W	WYNSP-30S05A	5	6.0	CE	428
	WYNSP-30S12A	12	2.5	CB CE	
	WYNSP-30S24A	24	1.3	cULus CB CE	
	WYNSP-30S48A	48	0.63	cULus CB CE	
50W	WYNSP-50S05A	5	10.0	CE	430
	WYNSP-50S12A	12	4.2	CB CE	
	WYNSP-50S24A	24	2.1	cULus CB CE	
	WYNSP-50S48A	48	1.05	cULus CB CE	
75W	WYNSP-75S05A	5	15.0	CE	432
	WYNSP-75S12A	12	6.3	CB CE	
	WYNSP-75S24A	24	3.2	cULus CB CE	
	WYNSP-75S48A	48	1.6	cULus CB CE	
	WYNSP-75S05AP	5	15.0	CE	446
	WYNSP-75S12AP	12	6.3	CE	
	WYNSP-75S24AP	24	3.2	CE	
	WYNSP-75S48AP	48	1.6	CE	
100W	WYNSP-100S05A	5	20.0	CE	434
	WYNSP-100S12A	12	8.0	CB CE	
	WYNSP-100S24A	24	4.2	cULus CB CE	
	WYNSP-100S48A	48	8.0	cULus CB CE	
	WYNSP-100S05AP	5	20.0	CE	448
	WYNSP-100S12AP	12	8.4	CE	
	WYNSP-100S24AP	24	4.2	CE	
	WYNSP-100S48AP	48	2.1	CE	
120W	WYNSP-120S05A	5	24.0	CE	436
	WYNSP-120S12A	12	10.0	CE	
	WYNSP-120S24A	24	5.0	CE	
	WYNSP-120S48A	48	2.5	CE	
	WYNSP-120S05AP	5	24.0	CE	450
	WYNSP-120S12AP	12	10.0	CB CE	
	WYNSP-120S24AP	24	5.0	cULus CB CE	
	WYNSP-120S48AP	48	2.5	cULus CB CE	

	MODEL	OUTPUT (V)	OUTPUT (A)	SAFETY STANDARDS	PAGE
150W	WYNSP-150S05A	5	30.0	CE	438
	WYNSP-150S12A	12	12.5	CE	
	WYNSP-150S24A	24	6.3	CE	
	WYNSP-150S48A	48	3.2	CE	
	WYNSP-150S05AP	5	30.0	CE	452
	WYNSP-150S12AP	12	12.5	CB CE	
	WYNSP-150S24AP	24	6.3	cULus CB CE	
	WYNSP-150S48AP	48	3.2	cULus CB CE	
200W	WYNSP-200S05A	5	40.0	CE	440
	WYNSP-200S12A	12	16.7	CE	
	WYNSP-200S24A	24	8.3	CE	
	WYNSP-200S48A	48	4.2	CE	
	WYNSP-200S05AP	5	40.0	CE	454
	WYNSP-200S12AP	12	16.7	CE	
	WYNSP-200S24AP	24	8.4	CE	
	WYNSP-200S48AP	48	4.17	CE	
250W	WYNSP-250S05A	5	50.0	CE	442
	WYNSP-250S12A	12	20.9	CE	
	WYNSP-250S24A	24	10.5	CE	
	WYNSP-250S48A	48	5.3	CE	
	WYNSP-250S05AP	5	50.0	CE	456
	WYNSP-250S12AP	12	20.9	CB CE	
	WYNSP-250S24AP	24	10.5	cULus CB CE	
	WYNSP-250S48AP	48	5.21	cULus CB CE	
300W	WYNSP-300S05A	5	60.0	CE	444
	WYNSP-300S12A	12	25.0	CE	
	WYNSP-300S24A	24	12.5	CE	
	WYNSP-300S48A	48	6.3	CE	
	WYNSP-300S05AP	5	50.8	CE	458
	WYNSP-300S12AP	12	25.0	CB CE	
	WYNSP-300S24AP	24	12.5	cULus CB CE	
	WYNSP-300S48AP	48	6.3	cULus CB CE	

10W - 75W Series [1CH WYSP – Single Output]

Selection Guide

	MODEL	OUTPUT (V)	OUTPUT (A)	SAFETY STANDARDS	PAGE
10W	WYSP-10S05D	5	2.0	CE	384
	WYSP-10S12D	12	0.84	CE	
	WYSP-10S24D	24	0.42	CE	
	WYSP-10S05DD	5	2.0	CE	400
	WYSP-10S12DD	12	0.84	CE	
	WYSP-10S24DD	24	0.42	CE	
	WYSP-10S05DB	5	2.0	CE	416
	WYSP-10S12DB	12	0.84	CE	
	WYSP-10S24DB	24	0.42	CE	
	WYSP-10S05P	5	2.0	CE	460
15W	WYSP-15S12P	12	1.25	CE	460
	WYSP-15S24P	24	0.63	CE	
	WYSP-15S05B	5	3.0	CE	464
	WYSP-15S09B	9	1.7	CE	
	WYSP-15S12B	12	1.3	CE	
	WYSP-15S15B	15	1.0	CE	
	WYSP-15S24B	24	0.7	CE	
	WYSP-15S48B	48	0.3	CE	
20W	WYSP-20S12D	12	1.67	CE	384
	WYSP-20S24D	24	0.84	CE	
	WYSP-20S12DD	12	1.67	CE	400
	WYSP-20S24DD	24	0.84	CE	
	WYSP-20S12DB	12	1.67	CE	416
	WYSP-20S24DB	24	0.84	CE	
30W	WYSP-30S05D	5	6.0	CE	386
	WYSP-30S12D	12	2.5	CB CE	
	WYSP-30S24D	24	1.3	cULus CB CE	
	WYSP-30S48D	48	0.63	cULus CB CE	
	WYSP-30S05DD	5	6.0	CE	402
	WYSP-30S12DD	12	2.5	CE	
	WYSP-30S24DD	24	1.3	CE	
	WYSP-30S48DD	48	0.63	CE	
	WYSP-30S05DB	5	6.0	CE	418
	WYSP-30S12DB	12	2.5	CE	
	WYSP-30S24DB	24	1.25	CE	
	WYSP-30S05P	5	6.0	CE	462
	WYSP-30S12P	12	2.5	CE	
	WYSP-30S24P	24	1.3	CE	
	WYSP-30S05B	5	6.0	CE	466
	WYSP-30S09B	9	3.4	CE	
	WYSP-30S12B	12	2.5	CE	
	WYSP-30S15B	15	2.0	CE	
	WYSP-30S24B	24	1.3	CE	
	WYSP-30S48B	48	0.6	CE	

	MODEL	OUTPUT (V)	OUTPUT (A)	SAFETY STANDARDS	PAGE
50W	WYSP-50S12D	12	4.2	CB CE	387
	WYSP-50S24D	24	2.1	cULus CB CE	
	WYSP-50S48D	48	1.05	cULus CB CE	
	WYSP-50S12DD	12	4.2	CE	403
	WYSP-50S24DD	24	2.1	CE	
	WYSP-50S48DD	48	1.1	CE	
	WYSP-50S12DB	12	4.2	CE	418
	WYSP-50S24DB	24	2.1	CE	
	WYSP-10S24DB	24	0.42	CE	468
	WYSP-50S05B	5	10.0	CE	
	WYSP-50S09B	9	5.6	CE	
	WYSP-50S12B	12	4.2	CE	
	WYSP-50S15B	15	3.4	CE	
	WYSP-50S24B	24	2.1	CE	
	WYSP-50S48B	48	1.1	CE	
75W	WYSP-75S12D	12	6.3	CB CE	389
	WYSP-75S24D	24	3.2	cULus CB CE	
	WYSP-75D48D	48	1.6	cULus CB CE	
	WYSP-75S12DP	12	6.3	CB CE	392
	WYSP-75S24DP	24	3.2	cULus CB CE	
	WYSP-75S48DP	48	1.6	cULus CB CE	
	WYSP-75S12DD	12	6.3	CE	405
	WYSP-75S24DD	24	3.2	CE	
	WYSP-75S48DD	48	1.6	CE	
	WYSP-75S24DB	24	3.2	CE	420
	WYSP-75S05B	5	12(110VAC), 15(220VAC)	CE	470
	WYSP-75S12B	12	6.3	CE	
	WYSP-75S15B	15	5.0	CE	
	WYSP-75S24B	24	3.2	CE	
	WYSP-75S48B	48	1.6	CE	

100W - 500W Series [1CH WYSP – Single Output]

Selection Guide

	MODEL	OUTPUT (V)	OUTPUT (A)	SAFETY STANDARDS	PAGE
100W	WYSP-100S12D	12	8.0	CB CE	390
	WYSP-100S24D	24	4.2	cULus CB CE	
	WYSP-100S48D	48	2.1	cULus CB CE	
	WYSP-100S12DP	12	8.4	CB CE	392
	WYSP-100S24DP	24	4.2	cULus CB CE	
	WYSP-100S48DP	48	2.1	cULus CB CE	
	WYSP-100S12DD	12	8.4	CE	406
	WYSP-100S24DD	24	4.2	CE	
	WYSP-100S48DD	48	2.1	CE	
	WYSP-100S24DB	24	4.2	CE	420
	WYSP-100S05A	5	20.0	CE	472
	WYSP-100S12A	12	8.4	CE	
	WYSP-100S15A	15	6.7	CE	
	WYSP-100S24A	24	4.2	CE	
	WYSP-100S48A	48	2.1	CE	
120W	WYSP-120S12DP	12	10.0	CB CE	393
	WYSP-120S24DP	24	5	cULus CB CE	
	WYSP-120S48DP	48	2.5	cULus CB CE	
	WYSP-120S12DD	12	10.0	CE	409
	WYSP-120S24DD	24	5.0	CE	
	WYSP-120S48DD	48	2.5	CE	
	WYSP-120S24DB	24	5.0	CE	420
	WYSP-120S05A	5	24.0	CE	474
	WYSP-120S12A	12	10.0	CE	
	WYSP-120S15A	15	8.0	CE	
	WYSP-120S24A	24	5.0	CE	
	WYSP-120S48A	48	2.5	CE	
150W	WYSP-150S12DP	12	12.5	CB CE	393
	WYSP-150S24DP	24	6.3	cULus CB CE	
	WYSP-150S48DP	48	3.2	cULus CB CE	
	WYSP-150S12DD	12	12.5	CE	409
	WYSP-150S24DD	24	6.3	CE	
	WYSP-150S48DD	48	3.2	CE	
	WYSP-150S24DB	24	6.3	CE	420
	WYSP-150S05A	5	30.0	CE	476
	WYSP-150S12A	12	12.5	CE	
	WYSP-150S15A	15	10.0	CE	
	WYSP-150S24A	24	6.3	CE	
	WYSP-150S48A	48	2.3	CE	
200W	WYSP-200S12DP	12	16.7	CB CE	395
	WYSP-200S24DP	24	8.4	cULus CB CE	
	WYSP-200S48DP	48	4.2	cULus CB CE	
	WYSP-200S12DD	12	16.7	CE	411
	WYSP-200S24DD	24	8.4	CE	
	WYSP-200S48DD	48	4.2	CE	

	MODEL	OUTPUT (V)	OUTPUT (A)	SAFETY STANDARDS	PAGE
200W	WYSP-200S12A	12	16.7	CE	478
	WYSP-200S15A	15	13.4	CE	
	WYSP-200S24A	24	8.4	CE	
	WYSP-200S48A	48	4.2	CE	
	WYSP-200S24AD	24	8.4	CE	480
220W	WYSP-220S05A	5	44	CE	482
	WYSP-220S12A	12	18.4	CE	
	WYSP-220S15A	15	14.7	CE	
	WYSP-220S24A	24	9.2	CE	
	WYSP-220S48A	48	4.6	CE	
250W	WYSP-250S12DP	12	20.9	CB CE	395
	WYSP-250S24DP	24	10.5	cULus CB CE	
	WYSP-250S48DP	48	5.2	cULus CB CE	
	WYSP-250S12DD	12	20.9	CE	411
	WYSP-250S24DD	24	10.5	CE	
	WYSP-250S48DD	48	5.2	CE	
	WYSP-250S12A	12	20.9	CE	484
	WYSP-250S15A	15	16.7	CE	
	WYSP-250S24A	24	10.5	CE	
	WYSP-250S48A	48	5.2	CE	
300W	WYSP-300S12DP	12	25.0	CB CE	396
	WYSP-300S24DP	24	12.5	cULus CB CE	
	WYSP-300S48DP	48	6.3	cULus CB CE	
	WYSP-300S12DD	12	25.0	CE	412
	WYSP-300S24DD	24	12.5	CE	
	WYSP-300S48DD	48	6.3	CE	
	WYSP-300S05A	5	60.0	CE	486
	WYSP-300S12A	12	25.0	CE	
	WYSP-3000S15A	15	20.0	CE	
	WYSP-300S24A	24	12.5	CE	
	WYSP-300S48A	48	6.3	CE	
400W	WYSP-400S24DP	24	16.7	cULus CB CE	398
	WYSP-400S48DP	48	8.4	cULus CB CE	
	WYSP-400S24DD	24	16.7	CE	414
	WYSP-400S48DD	48	8.4	CE	
500W	WYSP-500S24DP	24	20.9	cULus CB CE	398
	WYSP-500S48DP	48	10.5	cULus CB CE	
	WYSP-500S24DD	24	20.9	CE	414
	WYSP-500S48DD	48	10.5	CE	
	WYSP-500S24A	24	20.9	CE	486
	WYSP-500S48A	48	10.5	CE	
	WYSP-500S05C	5	100.0	CE	488
	WYSP-500S12C	15	41.7	CE	
	WYSP-500S24C	24	20.9	CE	
	WYSP-500S48C	48	10.5	CE	

	MODEL	OUTPUT(V)	OUTPUT(A)	SAFETY STANDARDS	PAGE
600W	WYSP-600S05C	5	120.0	CE	490
	WYSP-600S12C	15	50.0	CE	
	WYSP-600S24C	24	25.0	CE	
	WYSP-600S48C	48	12.5	CE	
	WYSP-600S05CP	5	120.0	CE	492
	WYSP-600S12CP	15	50.0	CE	
	WYSP-600S24CP	24	25.0	CE	
	WYSP-600S48CP	48	12.5	CE	
750W	WYSP-750S12C	15	62.5	CE	494
	WYSP-750S24C	24	31.3	CE	
	WYSP-750S48C	48	15.7	CE	
1000W	WYSP-1000S05C	5	200.0	CE	496
	WYSP-1000S12C	12	83.4	CE	
	WYSP-1000S24C	24	41.7	CE	
	WYSP-1000S48C	48	20.9	CE	
1200W	WYSP-1200S05C	5	24.0	CE	498
	WYSP-1200S12C	12	100.0	CE	
	WYSP-1200S24C	24	50.0	CE	
	WYSP-1200S48C	48	25.0	CE	
1500W	WYSP-1500S05C	5	300.0	CE	500
	WYSP-1500S12C	12	125.0	CE	
	WYSP-1500S24C	24	62.5	CE	
	WYSP-1500S48C	48	31.3	CE	

15W - 75W Series [2CH WYSP – Dual Output / 3CH WYSP – Triple Output]

Selection Guide

● 2CH WYSP – Dual Output

	MODEL	OUTPUT (V)	OUTPUT (A)	SAFETY STANDARDS	PAGE
15W	WYSP-15D05A	5/9	2.0	CE	504
	WYSP-15D0512A	5/12	2.0	CE	
	WYSP-15D0524A	5/24	2.0	CE	
	WYSP-15D12A	12/12	0.7	CE	
	WYSP-15D15A	15/15	0.5	CE	
	WYSP-15D05B	5/9	0.5	CE	
	WYSP-15D0512B	5/12	0.5	CE	
	WYSP-15D0524B	5/24	0.5	CE	
	WYSP-15D12B	12/12	0.5	CE	
	WYSP-15D15B	15/15	0.5	CE	
30W	WYSP-30D05A	5/9	3.0	CE	506
	WYSP-30D0512A	5/12	3.0	CE	
	WYSP-30D0524A	5/24	3.0	CE	
	WYSP-30D12A	12/12	1.2	CE	
	WYSP-30D15A	15/15	1.0	CE	
	WYSP-30D05B	5/9	1.6	CE	
	WYSP-30D0512B	5/12	1.2	CE	
	WYSP-30D0524B	5/24	0.6	CE	
	WYSP-30D12B	12/12	1.2	CE	
	WYSP-30D15B	15/15	1.0	CE	
50W	WYSP-50D05A	5/9	5.0	CE	508
	WYSP-50D0512A	5/12	3.0	CE	
	WYSP-50D0524A	5/24	3.0	CE	
	WYSP-50D12A	12/12	2.0	CE	
	WYSP-50D15A	15/15	1.6	CE	
	WYSP-50D05B	5/9	2.7	CE	
	WYSP-50D0512B	5/12	3.0	CE	
	WYSP-50D0524B	5/24	1.5	CE	
	WYSP-50D12B	12/12	2.0	CE	
	WYSP-50D15B	15/15	1.6	CE	
75W	WYSP-75D05A	5/9	7.5	CE	510
	WYSP-75D0512A	5/12	5.0	CE	
	WYSP-75D0524A	5/24	3.0	CE	
	WYSP-75D12A	12/12	3.1	CE	
	WYSP-75D15A	15/15	2.5	CE	
	WYSP-75D05B	5/9	4.0	CE	
	WYSP-75D0512B	5/12	4.0	CE	
	WYSP-75D0524B	5/24	2.5	CE	
	WYSP-75D12B	12/12	3.1	CE	
	WYSP-75D15B	15/15	2.5	CE	

● 3CH WYSP – Triple Output

	MODEL	OUTPUT (V)	OUTPUT (A)	SAFETY STANDARDS	PAGE
15W	WYSP-15T12A	5/12/-12	2.0/0.3/0.2	CE	512
	WYSP-15T15A	5/12/-15	2.0/0.3/0.2	CE	
	WYSP-15T12B	5/12/-12	2.0/0.3/0.2	CE	
	WYSP-15T15B	5/12/-15	2.0/0.3/0.2	CE	
30W	WYSP-30T12A	5/12/-12	3.0/1.0/0.3	CE	514
	WYSP-30T15A	5/12/-15	3.0/0.8/0.2	CE	
	WYSP-30T12B	5/12/-12	3.0/1.0/0.3	CE	
	WYSP-30T15B	5/12/-15	3.0/0.8/0.2	CE	
50W	WYSP-50T12A	5/12/-12	5.0/1.8/0.3	CE	516
	WYSP-50T15A	5/12/-15	3.0/1.4/0.3	CE	
	WYSP-50T12B	5/12/-12	5.0/1.8/0.3	CE	
	WYSP-50T15B	5/12/-15	3.0/1.4/0.3	CE	

모델 구분표 Explanation

● Ordering Information

WYNSP-15S05A

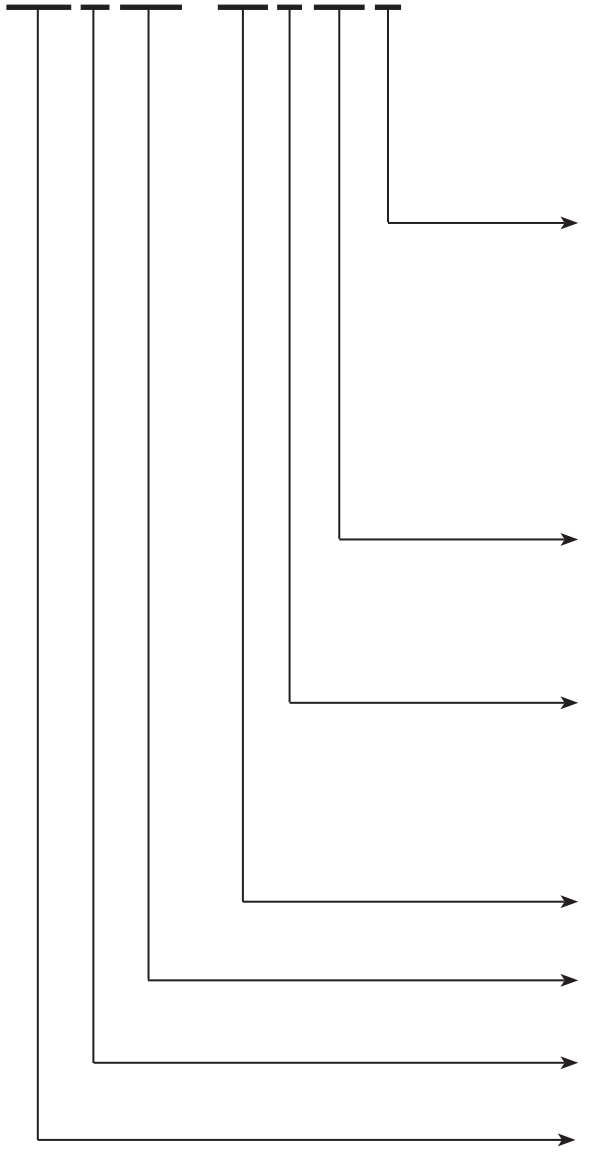

- Type
  - · A : Right Terminal type (ㄱ자형 단자 케이스 내부 매입형)
  - · B : Straightct Terminal type (-자형 단자 케이스 외부 돌출형)
  - · C : 대전류단자볼트형 (High Current Ter.)
  - · P : 내부회로역률보상형(Power Factor type)
  - · D : DIN Rail type
  - · P : Open Board(PCB) type
- Output Voltage
  - · 5V : 05 · 12V : 12
  - · 9V : 09 · 15V : 15 · 24V : 24 · 48V : 48
- Output
  - · S : Single output(1ch)
  - · D : Dual output(2ch)
  - · T : Triple output(3ch)
- Output Capacity(Watt)
- Product : SP – General type
- Sevies name – N : New type
- WOONYOUNG CO.,LTD.

스위칭 전원장치

Switching Mode Power Supply(SMPS)

DIN-Rail Type









- 10W
- 20W
- 30W
- 50W
- 75W
- 100W
- 120W
- 150W
- 200W
- 250W
- 300W
- 500W

DIN-RAIL **D TYPE** Series 10, 20W

CE RoHS



Features

- Input Voltage Range (AC90－264V)
- Built－in Inrush Current Limitter
- Over Current Protection
- Short Circuit Protection
- Over Temperature Protection
- Auto－Restart Mode

DIN Rail 취부형 구조로 현장 작업시 간편하며 대량 설치 시 면적을 최소로 줄일수 있으며, 직접 벽부에 설치할 수 있도록 제품 하부에 Wall mount 레버가 장착되어 있어 활용범위가 넓은 Unit형 SMPS입니다.

This is a unitized SMPS that is convenient to work on at sites, can reduce areas during large-scale installation, and has a wall-mount lever at its bottom for direct installation on walls to be wide in application scope as a DIN rail and wall attached structure.

Specifications

ITEM \ MODEL		WYSP－10S05D	WYSP－10S12D	WYSP－10S24D	WYSP－20S12D	WYSP－20S24D
Input	Voltage	110VAC...0.4A/220VAC.....0.2A(Full Load) FREE VOLTAGE				
	Frequency	50/60Hz(47 ～ 440HzorDC)				
	Efficlency	70% typ	75% typ	78% typ	75% typ	78% typ
	Inrushcurrent	110VAC....14A/220VAC....28A(Io=100%,Ta=25°C at cold start)				
Output	Voltage (V)	5	12	24	12	24
	Current (A)	2.0	0.84	0.42	1.67	0.84
	Regulation Line (mV)	25Max	50Max	75Max	50Max	75Max
	Regulation Load (mV)	50Max	100Max	150Max	100Max	150Max
	Ripple (mVp－p)	50Max	100Max	150Max	100Max	150Max
	Ripple Noise (mVp－p)	100Max	170Max	200Max	170Max	200Max
	Temperature Drift 0～50°C (mV)	50Max	100Max	150Max	100Max	150Max
	Rise Time (mS)	100 Max (AC IN 85V Io = 100%)				
	Holding Time (mS)	15 typ (AC IN 85V Io = 100%)				
Protectioncircuit	Over Current Protection	Works at over 110% of rating and recovers automatically				
	Over Voltage Protection	–				
Electrically Isolated	Input-Output	AC 1,500V 1minute, DC 500V 100MΩ(At room temperature & Humidity)				
	Input-Case and FG	AC 1,500V 1minute, DC 500V 100MΩ(At room temperature & Humidity)				
	Output－Case	AC 500V 1minute, DC 500V 100MΩ(At room temperature & Humidity)				
Environment	Operationtemp. and Humid	0 ~ +50°C, 20 ～ 90% RH (Non Condensing)				
	Storagetemp. and Humid	−20 ~ +75°C, 20 ～ 90% RH (Non Condensing)				
General	Cooling	Natural cooling				
	Function	–				
	Weight (kg)	0.2				

DIN-RAIL **D TYPE** Series 10, 20W

CE RoHS

Derating Curve For Ambient

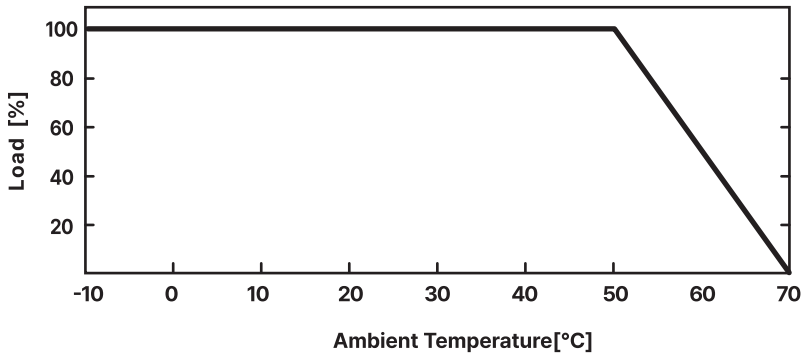

Derating Curve For Input Voltage

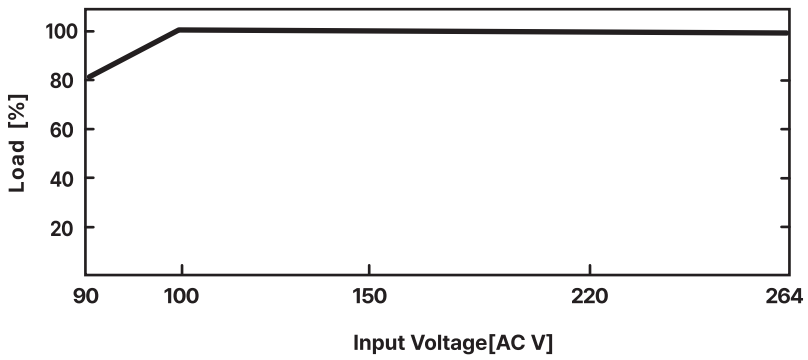

Dimension

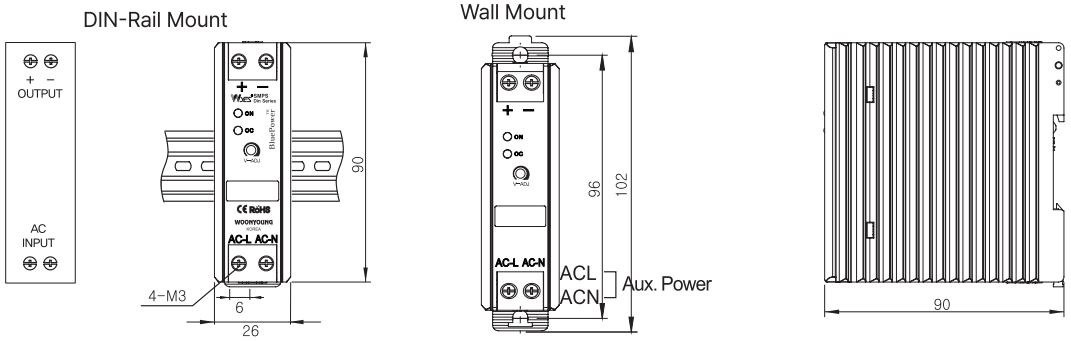

Terminal

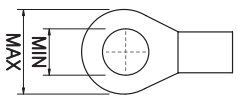

Max 5 , Min 3

DIN-RAIL D TYPE Series 30W

UL 인증



Features

- Wide Input Voltage Range (AC90－264V)
- Built-in Inrush Current Limitter
- Over Current Protection
- Short Circuit Protection
- Over Temperature Protection
- Auto－Restart Mode
- LED Indicator for Power on & Over Load
- SEMI － F47 (200VAC Only)

DIN Rail 취부형 구조로 현장 작업시 간편하며 대량 설치 시 면적을 최소로 줄일수 있으며, 직접 벽부에 설치할 수 있도록 제품 하부에 Wall mount 레버가 장착되어 있어 활용범위가 넓은 Unit형 SMPS입니다.

This is a unitized SMPS that is convenient to work on at sites, can reduce areas during large-scale installation, and has a wall-mount lever at its bottom for direct installation on walls to be wide in application scope as a DIN rail and wall attached structure.

Specifications

ITEM \ MODEL			WYSP－30S05D	WYSP－30S12D	WYSP－30S24D	WYSP－30S48D
SAFETY STANDARDS			CE IEC 60950－1:2013	CB CE IEC 62368－1:2018	cULus CB CE IEC 62368－1:2018	cULus CB CE IEC 62368－1:2018
INPUT	AC Input Volatage Nominal		AC 100 ～ 240 [V]			
	AC Input Volatage Range		AC 90 ～ 264 [V]			
	CURRENT	AC110 [V]	1.3 [A]			
		AC220 [V]	0.6 [A]			
	FREQUENCY		50/60 [Hz]			
	EFFICIENCY	AC110 [V]	70 [%]	87 [%]	87 [%]	87 [%]
		AC220 [V]	72 [%]	88 [%]	88 [%]	88 [%]
	INRUSH CURRENT	AC110 [V]	20 [Apk] typ	20 [Apk] typ	30 [Apk] typ	30 [Apk] typ
		AC220 [V]	30 [Apk] typ	30 [Apk] typ	40 [Apk] typ	40 [Apk] typ
	STANDBY POWER	AC110 [V]	0.3W(DOE VI)			
		AC220 [V]				
	LEAKAGE CURRENT (60Hz)	AC110 [V]	MAX 0.5mA			
		AC220 [V]	MAX 1mA			
OUTPUT	VOLTAGE		5 [V]	12 [V]	24 [V]	48 [V]
	CURRENT		6.0 [A]	2.5 [A]	1.3 [A]	0.63 [A]
	LINE REGULATION		60 [mV] max	60 [mV] max	120 [mV] max	240 [mV] max
	LOAD REGULATION		240 [mV] max	240 [mV] max	480 [mV] max	720 [mV] max
	RIPPLE & NOISE		120 [mVp－p]	100 [mVp－p]	100 [mVp－p]	180 [mVp－p]
	TEMPERATURE DRIFT (0～50°C)		240[mV] max			
	START-UP TIME	AC110 [V]	2 [s] at Full Load			
		AC220 [V]				
	HOLD-UP TIME	AC110 [V]	15 [ms] at Full Load			
		AC220 [V]	60 [ms] at Full Load			
PROTECTION CIRCUIT	OVER CURRENT PROTECTION		Works over 140% of rating and recovers automatically (hiccup)			
	OVER VOLTAGE PROTECTION		6 ～ 10[V]	15 ～ 22 [V]	27 ～ 35 [V]	50 ～ 70 [V]
			Re power on to recover (shut down)			
	OVER RATED INDICATION		Works over 105% of rating and recovers automatically (Red LED)			
WITHSTAND VOLTAGE	INPUT－OUTPUT		AC3,000V 1minute, Cutoff current = 20mA			
	INPUT－CASE, FG		AC2,000V 1minute, Cutoff current = 20mA			
	OUTPUT－CASE, FG		AC500V 1minute, Cutoff current = 30mA			
ISOLATION RESISTANCE	INPUT－OUTPUT		DC500V 50MΩ			
	INPUT－CASE, FG		DC500V, 50MΩ			
	OUTPUT－CASE, FG		DC100V 10MΩ			
ENVIRONMENT	OPERATING TEMP AND HUMID		－10 ～ 50°C, 20 ～ 90% rh (non condensing)			
	STORAGE TEMP AND HUMID		－20 ～ 70°C (non condensing)			
GENERAL	COOLING		Air			
	WEIGHT		0.3 [kg]			

DIN-RAIL **D TYPE** Series 50W

UL 인증



Features

- Wide Input Voltage Range (AC90－264V)
- Built-in Inrush Current Limitter
- Over Current Protection
- Short Circuit Protection
- Over Temperature Protection
- Auto－Restart Mode
- LED Indicator for Power on & Over Load
- SEMI － F47 (200VAC Only)

DIN Rail 취부형 구조로 현장 작업시 간편하며 대량 설치 시 면적을 최소로 줄일수 있으며, 직접 벽부에 설치할 수 있도록 제품 하부에 Wall mount 레버가 장착되어 있어 활용범위가 넓은 Unit형 SMPS입니다.

This is a unitized SMPS that is convenient to work on at sites, can reduce areas during large-scale installation, and has a wall-mount lever at its bottom for direct installation on walls to be wide in application scope as a DIN rail and wall attached structure.

Specifications

ITEM \ MODEL			WYSP－50S12D	WYSP－50S24D	WYSP－50S48D
SAFETY STANDARDS			CB CE IEC 62368－1:2018	cULus CB CE IEC 62368－1:2018	cULus CB CE IEC 62368－1:2018
INPUT	AC Input Volatage Nominal		AC 100 ～ 240 [V]		
	AC Input Volatage Range		AC 90 ～ 264 [V]		
	CURRENT	AC110 [V]	1.3 [A]		
		AC220 [V]	0.6 [A]		
	FREQUENCY		50/60 [Hz]		
	EFFICIENCY	AC110 [V]	87 [%]	88 [%]	88 [%]
		AC220 [V]	88 [%]	89 [%]	89 [%]
	INRUSH CURRENT	AC110 [V]	20 [Apk] typ	30 [Apk] typ	30 [Apk] typ
		AC220 [V]	30 [Apk] typ	50 [Apk] typ	50 [Apk] typ
	STANDBY POWER	AC110 [V]	0.3W(DOE VI)		
		AC220 [V]			
	LEAKAGE CURRENT (60Hz)	AC110 [V]	MAX 0.5mA		
		AC220 [V]	MAX 1mA		
OUTPUT	VOLTAGE		12 [V]	24 [V]	48 [V]
	CURRENT		4.2 [A]	2.1 [A]	1.05 [A]
	LINE REGULATION		60 [mV] max	120 [mV] max	240 [mV] max
	LOAD REGULATION		240 [mV] max	480 [mV] max	720 [mV] max
	RIPPLE & NOISE		100 [mVp－p]	100 [mVp－p]	180 [mVp－p]
	TEMPERATURE DRIFT (0～50°C)		240[mV] max		
	START-UP TIME	AC110 [V]	2 [s] at Full Load		
		AC220 [V]			
	HOLD-UP TIME	AC110 [V]	12 [ms] at Full Load		
		AC220 [V]	50 [ms] at Full Load		
PROTECTION CIRCUIT	OVER CURRENT PROTECTION		Works over 140% of rating and recovers automatically (hiccup)		
	OVER VOLTAGE PROTECTION		15 ～ 22 [V]	27 ～ 35 [V]	50 ～ 70 [V]
			Re power on to recover (shut down)		
	OVER RATED INDICATION		Works over 105% of rating and recovers automatically (Red LED)		
WITHSTAND VOLTAGE	INPUT－OUTPUT		AC3,000V 1minute, Cutoff current = 20mA		
	INPUT－CASE, FG		AC2,000V 1minute, Cutoff current = 20mA		
	OUTPUT－CASE, FG		AC500V 1minute, Cutoff current = 30mA		
ISOLATION RESISTANCE	INPUT－OUTPUT		DC500V 50MΩ		
	INPUT－CASE, FG		DC500V, 50MΩ		
	OUTPUT－CASE, FG		DC100V 10MΩ		
ENVIRONMENT	OPERATING TEMP AND HUMID		－10 ～ 50°C, 20 ～ 90% rh (non condensing)		
	STORAGE TEMP AND HUMID		－20 ～ 70°C (non condensing)		
GENERAL	COOLING		Air		
	WEIGHT		0.4 [kg]		

Front part name

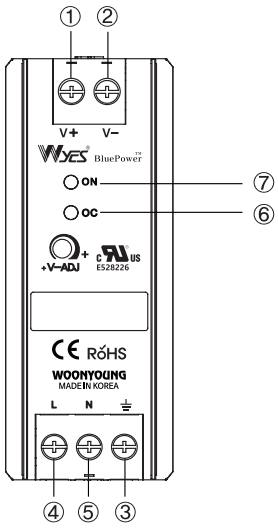

① + Output Terminal
② − Output Terminal
③ Frame Ground
④ AC Input (L)
⑤ AC Input (N)
⑥ Over Current LED (Red)
⑦ Output LED (Green)

Derating Curve For Ambient

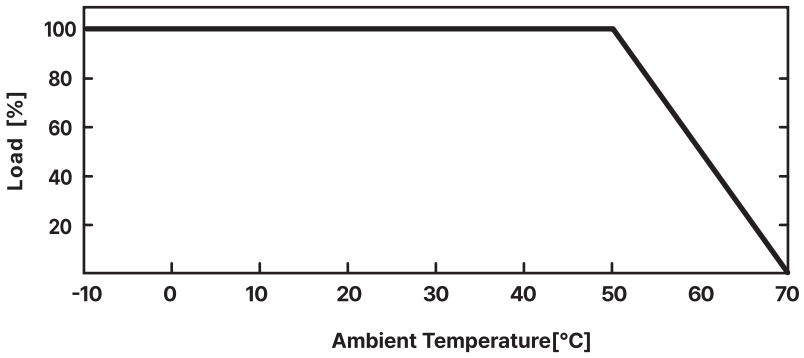

Derating Curve For Input Voltage

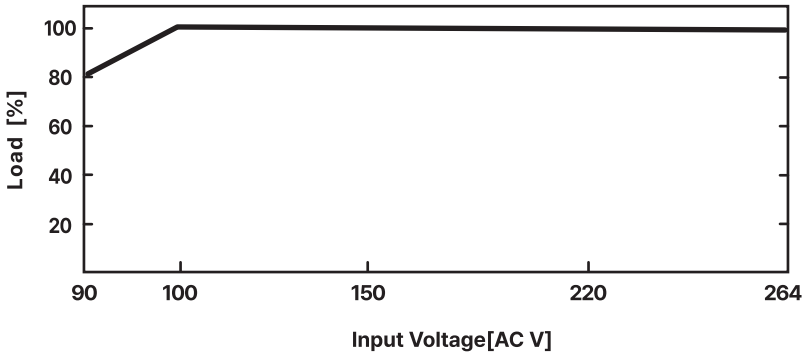

Dimension

DIN-Rail Mount

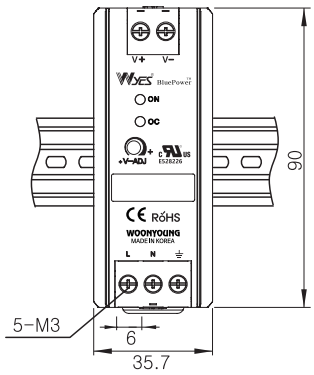

Wall Mount

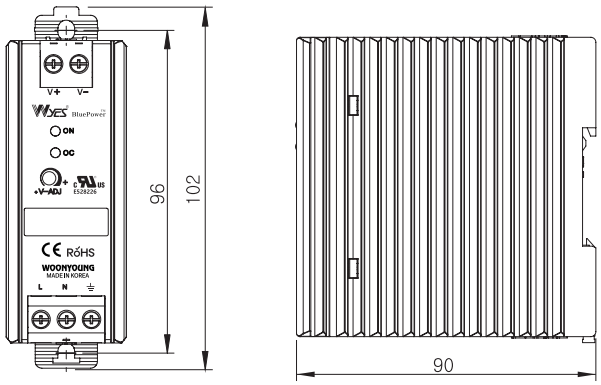

Terminal

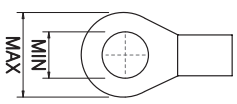

Max 6 , Min 3.5

DIN-RAIL D TYPE Series 75W

UL 인증



Features

- Wide Input Voltage Range (AC90－264V)
- Built－in Inrush Current Limitter
- Over Current Protection
- Short Circuit Protection
- Over Temperature Protection
- Auto－Restart Mode
- LED Indicator for Power on & Over Load
- SEMI－F47 (200VAC Only)

DIN Rail 취부형 구조로 현장 작업시 간편하며 대량 설치 시 면적을 최소로 줄일수 있으며, 직접 벽부에 설치할 수 있도록 제품 하부에 Wall mount 레버가 장착되어 있어 활용범위가 넓은 Unit형 SMPS입니다.

This is a unitized SMPS that is convenient to work on at sites, can reduce areas during large-scale installation, and has a wall-mount lever at its bottom for direct installation on walls to be wide in application scope as a DIN rail and wall attached structure.

Specifications

ITEM \ MODEL			WYSP－75S12D	WYSP－75S24D	WYSP－75S48D
SAFETY STANDARDS			CB CE IEC 62368－1:2018	cULus CB CE IEC 62368－1:2018	cULus CB CE IEC 62368－1:2018
INPUT	AC Input Volatage Nominal		AC 100 ～ 240 [V]		
	AC Input Volatage Range		AC 90 ～ 264 [V]		
	CURRENT	AC110 [V]	1.5 [A]		
		AC220 [V]	0.7 [A]		
	FREQUENCY		50/60 [Hz]		
	EFFICIENCY	AC110 [V]	90 [%]	91 [%]	91 [%]
		AC220 [V]	91 [%]	92 [%]	92 [%]
	INRUSH CURRENT	AC110 [V]	30 [Apk] typ	30 [Apk] typ	30 [Apk] typ
		AC220 [V]	50 [Apk] typ	50 [Apk] typ	50 [Apk] typ
	STANDBY POWER	AC110 [V]	0.3W(DOE VI)		
		AC220 [V]			
	LEAKAGE CURRENT (60Hz)	AC110 [V]	MAX 3.5mA		
		AC220 [V]	MAX 3.5mA		
OUTPUT	VOLTAGE		12 [V]	24 [V]	48 [V]
	CURRENT		6.3 [A]	3.2 [A]	1.6 [A]
	LINE REGULATION		60 [mV] max	120 [mV] max	240 [mV] max
	LOAD REGULATION		240 [mV] max	480 [mV] max	720 [mV] max
	RIPPLE & NOISE		100 [mVp-p]	100 [mVp-p]	180 [mVp-p]
	TEMPERATURE DRIFT (0～50°C)		240[mV] max		
	START-UP TIME	AC110 [V]	1 [s] at Full Load		
		AC220 [V]			
	HOLD-UP TIME	AC110 [V]	16 [ms] at Full Load		
		AC220 [V]	70 [ms] at Full Load		
PROTECTION CIRCUIT	OVER CURRENT PROTECTION		Works over 140% of rating and recovers automatically (hiccup)		
	OVER VOLTAGE PROTECTION		15 ～ 22 [V]	27 ～ 35 [V]	50 ～ 70 [V]
			Re power on to recover (shut down)		
	OVER RATED INDICATION		Works over 105% of rating and recovers automatically (Red LED)		
WITHSTAND VOLTAGE	INPUT－OUTPUT		AC3,000V 1minute, Cutoff current = 20mA		
	INPUT－CASE, FG		AC2,000V 1minute, Cutoff current = 20mA		
	OUTPUT－CASE, FG		AC500V 1minute, Cutoff current = 30mA		
ISOLATION RESISTANCE	INPUT－OUTPUT		DC500V 50MΩ		
	INPUT－CASE, FG		DC500V, 50MΩ		
	OUTPUT－CASE, FG		DC100V 10MΩ		
ENVIRONMENT	OPERATING TEMP AND HUMID		－10 ～ 50°C, 20 ～ 90% rh (non condensing)		
	STORAGE TEMP AND HUMID		－20 ～ 70°C (non condensing)		
GENERAL	COOLING		Air		
	WEIGHT		0.4 [kg]		

DIN-RAIL D TYPE Series 100W

UL 인증



Features

- Wide Input Voltage Range (AC90－264V)
- Built-in Inrush Current Limitter
- Over Current Protection
- Short Circuit Protection
- Over Temperature Protection
- Auto－Restart Mode
- LED Indicator for Power on & Over Load
- SEMI － F47 (200VAC Only)

DIN Rail 취부형 구조로 현장 작업시 간편하며 대량 설치 시 면적을 최소로 줄일수 있으며, 직접 벽부에 설치할 수 있도록 제품 하부에 Wall mount 레버가 장착되어 있어 활용범위가 넓은 Unit형 SMPS입니다.

This is a unitized SMPS that is convenient to work on at sites, can reduce areas during large-scale installation, and has a wall-mount lever at its bottom for direct installation on walls to be wide in application scope as a DIN rail and wall attached structure.

Specifications

ITEM \ MODEL			WYSP－100S12D	WYSP－100S24D	WYSP－100S48D
SAFETY STANDARDS			CB CE IEC 62368－1:2018	cULus CB CE IEC 62368－1:2018	cULus CB CE IEC 62368－1:2018
INPUT	AC Input Volatage Nominal		AC 100 ～ 240 [V]		
	AC Input Volatage Range		AC 90 ～ 264 [V]		
	CURRENT	AC110 [V]	1.6 [A]		
		AC220 [V]	0.75 [A]		
	FREQUENCY		50/60 [Hz]		
	EFFICIENCY	AC110 [V]	90 [%]	91 [%]	91 [%]
		AC220 [V]	91 [%]	92 [%]	92 [%]
	INRUSH CURRENT	AC110 [V]	30 [Apk] typ	30 [Apk] typ	30 [Apk] typ
		AC220 [V]	50 [Apk] typ	50 [Apk] typ	50 [Apk] typ
	STANDBY POWER	AC110 [V]	0.3W(DOE VI)		
		AC220 [V]			
	LEAKAGE CURRENT (60Hz)	AC110 [V]	MAX 3.5mA		
		AC220 [V]	MAX 3.5mA		
OUTPUT	VOLTAGE		12 [V]	24 [V]	48 [V]
	CURRENT		8.0 [A]	4.2 [A]	2.1 [A]
	LINE REGULATION		60 [mV] max	120 [mV] max	240 [mV] max
	LOAD REGULATION		240 [mV] max	480 [mV] max	720 [mV] max
	RIPPLE & NOISE		100 [mVp－p]	100 [mVp－p]	180 [mVp－p]
	TEMPERATURE DRIFT (0～50°C)		240[mV] max		
	START-UP TIME	AC110 [V]	1 [s] at Full Load		
		AC220 [V]			
	HOLD-UP TIME	AC110 [V]	16 [ms] at Full Load		
		AC220 [V]	70 [ms] at Full Load		
PROTECTION CIRCUIT	OVER CURRENT PROTECTION		Works over 140% of rating and recovers automatically (hiccup)		
	OVER VOLTAGE PROTECTION		15 ～ 22 [V]	27 ～ 35 [V]	50 ～ 70 [V]
			Re power on to recover (shut down)		
	OVER RATED INDICATION		Works over 105% of rating and recovers automatically (Red LED)		
WITHSTAND VOLTAGE	INPUT－OUTPUT		AC3,000V 1minute, Cutoff current = 20mA		
	INPUT－CASE, FG		AC2,000V 1minute, Cutoff current = 20mA		
	OUTPUT－CASE, FG		AC500V 1minute, Cutoff current = 30mA		
ISOLATION RESISTANCE	INPUT－OUTPUT		DC500V 50MΩ		
	INPUT－CASE, FG		DC500V, 50MΩ		
	OUTPUT－CASE, FG		DC100V 10MΩ		
ENVIRONMENT	OPERATING TEMP AND HUMID		－10 ～ 50°C, 20 ～ 90% rh (non condensing)		
	STORAGE TEMP AND HUMID		－20 ～ 70°C (non condensing)		
GENERAL	COOLING		Air		
	WEIGHT		0.6 [kg]		

DIN-RAIL **D TYPE** Series 75, 100W

● Front part name

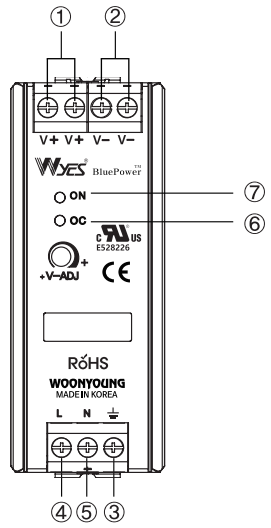

① + Output Terminal
② − Output Terminal
③ Frame Ground
④ AC Input (L)
⑤ AC Input (N)
⑥ Over Current LED (Red)
⑦ Output LED (Green)

● Derating Curve For Ambient

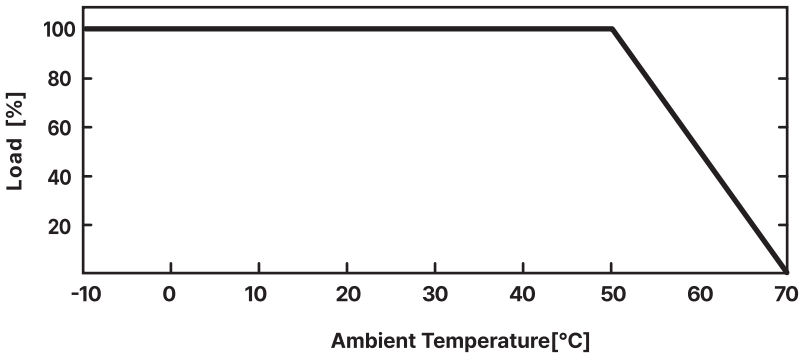

● Derating Curve For Input Voltage

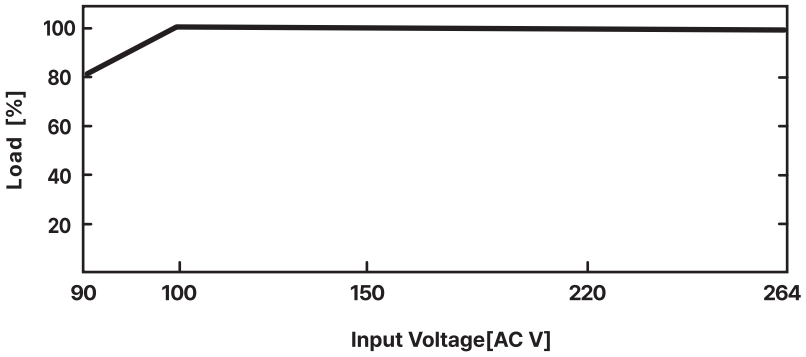

● Dimension

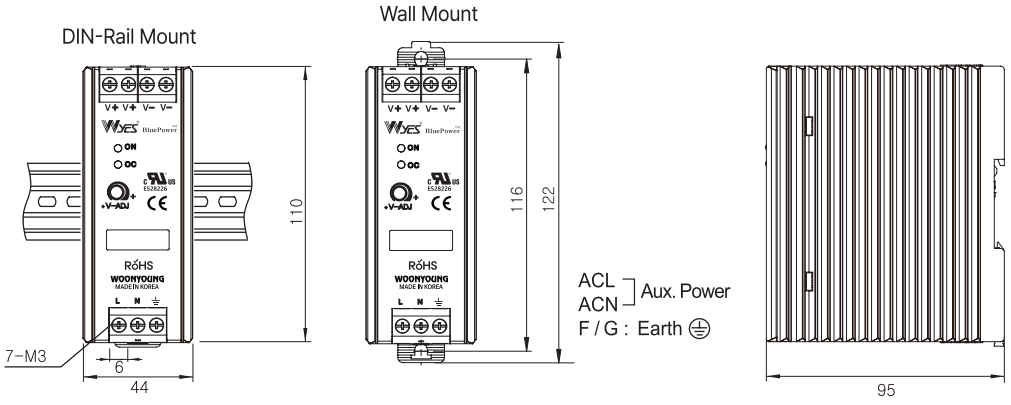

● Terminal

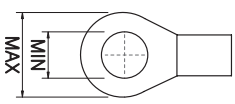

Max 6 , Min 3.5

DIN-RAIL DP TYPE Series(역률개선용) 75, 100W

UL 인증

PFC Type



Features

- Input Voltage Range (AC90－264V)
- Over Current Protection
- Over Temperature Protection
- Built－in PFC
- Built－in Inrush Current Limitter
- Short Circuit Protection
- Auto-Restart Mode
- SEMI － F47 (200VAC Only)

● DIN Rail 및 벽부 취부형 구조로 현장 작업시 간편하며 대량 설치시 면적을 최소로 줄일수 있는 Unit형 SMPS 입니다.

● This is a unitized SMPS that is convenient to work on at sites and can reduce areas during large-scale installation as a DIN rail and wall attached structure.

Specifications

ITEM \ MODEL			WYSP－75S12DP	WYSP－75S24DP	WYSP－75S48DP	WYSP－100S12DP	WYSP－100S24DP	WYSP－100S48DP
SAFETY STANDARDS			CB CE IEC 62368－1:2018	cULus CB CE IEC 62368－1:2018	cULus CB CE IEC 62368－1:2018	CB CE IEC 62368－1:2018	cULus CB CE IEC 62368－1:2018	cULus CB CE IEC 62368－1:2018
INPUT	AC Input Volatage Nominal		AC 100 ～ 240 [V]					
	AC Input Volatage Range		AC 90 ～ 264 [V]					
	CURRENT	AC110 [V]	1.5 [A]					
		AC220 [V]	0.8 [A]					
	FREQUENCY		50/60 [Hz]					
	EFFICIENCY	AC110 [V]	89 [%]	90 [%]	90 [%]	89 [%]	90 [%]	90 [%]
		AC220 [V]	90 [%]	91 [%]	91 [%]	90 [%]	91 [%]	91 [%]
	POWER FACTOR		PF≥0.95(Half Load)					
	INRUSH CURRENT	AC110 [V]	30 [Apk] typ	30 [Apk] typ	30 [Apk] typ	30 [Apk] typ	30 [Apk] typ	30 [Apk] typ
		AC220 [V]	50 [Apk] typ	50 [Apk] typ	50 [Apk] typ	50 [Apk] typ	50 [Apk] typ	50 [Apk] typ
	STANDBY POWER	AC110 [V]	0.3W(DOE VI)					
		AC220 [V]						
	LEAKAGE CURRENT (60Hz)	AC110 [V]	MAX 0.5mA					
		AC220 [V]	MAX 1.0mA					
OUTPUT	VOLTAGE		12 [V]	24 [V]	48 [V]	12 [V]	24 [V]	48 [V]
	CURRENT		6.3 [A]	3.2 [A]	1.6 [A]	8.4 [A]	4.2 [A]	2.1 [A]
	LINE REGULATION		120 [mV] max	120 [mV] max	240 [mV] max	120 [mV] max	120 [mV] max	240 [mV] max
	LOAD REGULATION		240 [mV] max	240 [mV] max	720 [mV] max	240 [mV] max	240 [mV] max	720 [mV] max
	RIPPLE & NOISE		120 [mVp-p]	150 [mVp－p]	100 [mVp－p]	120 [mVp－p]	150 [mVp－p]	180 [mVp－p]
	TEMPERATURE DRIFT (0～50°C)		240[mV] max					
	START-UP TIME	AC110 [V]	3 [s] at Full Load					
		AC220 [V]						
	HOLD-UP	AC110 [V]	15 [ms] at Full Load					
		AC220 [V]	70 [ms] at Full Load					
PROTECTION CIRCUIT	OVER CURRENT PROTECTION		Works over 140% of rating and recovers automatically (hiccup)					
	OVER VOLTAGE PROTECTION		15 ～ 22 [V]	27 ～ 35 [V]	50 ～ 70 [V]	15 ～ 22 [V]	27 ～ 35 [V]	50 ～ 70 [V]
			Re power on to recover (shut down)					
	OVER RATED INDICATION		Works over 105% of rating and recovers automatically (Red LED)					
WITHSTAND VOLTAGE	INPUT－OUTPUT		AC3,000V 1minute, Cutoff current = 20mA					
	INPUT－CASE, FG		AC2,000V 1minute, Cutoff current = 20mA					
	OUTPUT－CASE, FG		AC500V 1minute, Cutoff current = 30mA					
ISOLATION RESISTANCE	INPUT－OUTPUT		DC500V 50MΩ					
	INPUT－CASE, FG		DC500V, 50MΩ					
	OUTPUT－CASE, FG		DC100V 10MΩ					
ENVIRONMENT	OPERATING TEMP AND HUMID		－10 ～ 50°C, 20 ～ 90% rh (non condensing)					
	STORAGE TEMP AND HUMID		－20 ～ 70°C (non condensing)					
GENERAL	COOLING		Air					
	WEIGHT		1.0 [kg]					

DIN-RAIL DP TYPE Series(역률개선용) 120, 150W

UL 인증

PFC Type



Features

- Input Voltage Range (AC90－264V)
- Over Current Protection
- Over Temperature Protection
- Built－in PFC
- Built－in Inrush Current Limitter
- Short Circuit Protection
- Auto－Restart Mode
- SEMI － F47 (200VAC Only)

DIN Rail 및 벽부 취부형 구조로 현장 작업시 간편하며 대량 설치시 면적을 최소로 줄일수 있는 Unit형 SMPS 입니다.

This is a unitized SMPS that is convenient to work on at sites and can reduce areas during large-scale installation as a DIN rail and wall attached structure.

Specifications

ITEM \ MODEL			WYSP-120S12DP	WYSP-120S24DP	WYSP-120S48DP	WYSP-150S12DP	WYSP-150S24DP	WYSP-150S48DP
SAFETY STANDARDS			CB CE IEC 62368-1:2018	cULus CB CE IEC 62368-1:2018	cULus CB CE IEC 62368-1:2018	CB CE IEC 62368-1:2018	cULus CB CE IEC 62368-1:2018	cULus CB CE IEC 62368-1:2018
INPUT	AC Input Volatage Nominal		AC 100 ~ 240 [V]					
	AC Input Volatage Range		AC 90 ~ 264 [V]					
	CURRENT	AC110 [V]	1.5 [A]					
		AC220 [V]	0.8 [A]					
	FREQUENCY		50/60 [Hz]					
	EFFICIENCY	AC110 [V]	89 [%]	90 [%]	90 [%]	89 [%]	90 [%]	90 [%]
		AC220 [V]	90 [%]	91 [%]	91 [%]	90 [%]	91 [%]	91 [%]
	POWER FACTOR		PF≥0.95(Half Load)					
	INRUSH CURRENT	AC110 [V]	30 [Apk] typ	30 [Apk] typ	30 [Apk] typ	30 [Apk] typ	30 [Apk] typ	30 [Apk] typ
		AC220 [V]	50 [Apk] typ	50 [Apk] typ	50 [Apk] typ	50 [Apk] typ	50 [Apk] typ	50 [Apk] typ
	STANDBY POWER	AC110 [V]	0.3W(DOE VI)					
		AC220 [V]						
	LEAKAGE CURRENT (60Hz)	AC110 [V]	MAX 0.5mA					
		AC220 [V]	MAX 1.0mA					
OUTPUT	VOLTAGE		12 [V]	24 [V]	48 [V]	12 [V]	24 [V]	48 [V]
	CURRENT		10.0 [A]	5 [A]	2.5 [A]	12.5 [A]	6.3 [A]	3.2 [A]
	LINE REGULATION		120 [mV] max	120 [mV] max	240 [mV] max	120 [mV] max	120 [mV] max	240 [mV] max
	LOAD REGULATION		240 [mV] max	240 [mV] max	720 [mV] max	240 [mV] max	240 [mV] max	720 [mV] max
	RIPPLE & NOISE		120 [mVp－p]	150 [mVp－p]	100 [mVp－p]	120 [mVp－p]	150 [mVp－p]	180 [mVp－p]
	TEMPERATURE DRIFT (0~50°C)		240[mV] max					
	START-UP TIME	AC110 [V]	3 [s] at Full Load					
		AC220 [V]						
	HOLD-UP	AC110 [V]	15 [ms] at Full Load					
		AC220 [V]	70 [ms] at Full Load					
PROTECTION CIRCUIT	OVER CURRENT PROTECTION		Works over 140% of rating and recovers automatically (hiccup)					
	OVER VOLTAGE PROTECTION		15 ~ 22 [V]	27 ~ 35 [V]	50 ~ 70 [V]	15 ~ 22 [V]	27 ~ 35 [V]	50 ~ 70 [V]
			Re power on to recover (shut down)					
	OVER RATED INDICATION		Works over 105% of rating and recovers automatically (Red LED)					
WITHSTAND VOLTAGE	INPUT－OUTPUT		AC3,000V 1minute, Cutoff current = 20mA					
	INPUT－CASE, FG		AC2,000V 1minute, Cutoff current = 20mA					
	OUTPUT－CASE, FG		AC500V 1minute, Cutoff current = 30mA					
ISOLATION RESISTANCE	INPUT－OUTPUT		DC500V 50MΩ					
	INPUT－CASE, FG		DC500V, 50MΩ					
	OUTPUT－CASE, FG		DC100V 10MΩ					
ENVIRONMENT	OPERATING TEMP AND HUMID		－10 ~ 50°C, 20 ~ 90% rh (non condensing)					
	STORAGE TEMP AND HUMID		－20 ~ 70°C (non condensing)					
GENERAL	COOLING		Air					
	WEIGHT		1.0 [kg]					

DIN-RAIL DP TYPE Series(역률개선용) 75, 100, 120, 150W

Front part name

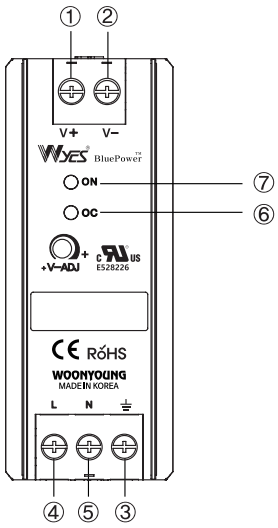

① + Output Terminal
② − Output Terminal
③ Frame Ground
④ AC Input (L)
⑤ AC Input (N)
⑥ Over Current LED (Red)
⑦ Output LED (Green)

Derating Curve For Ambient

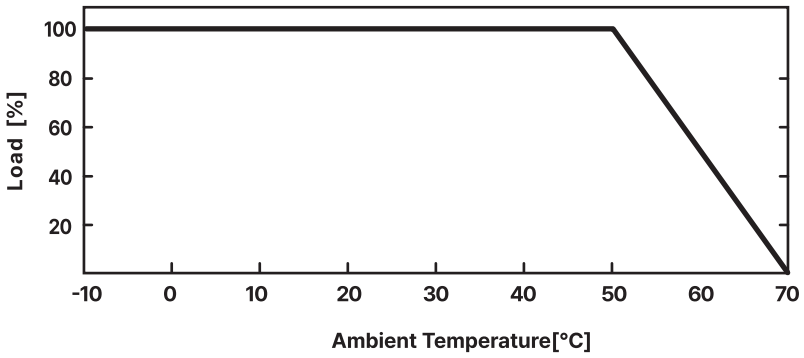

Derating Curve For Input Voltage

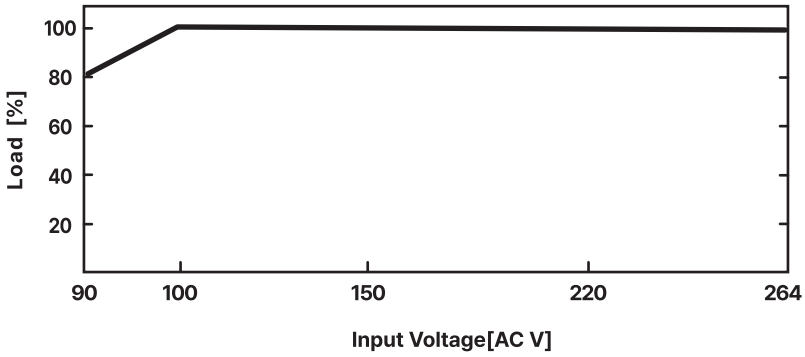

Dimension

DIN-Rail Mount

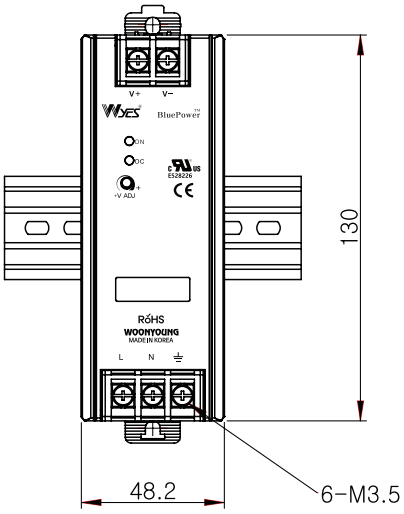

Wall Mount

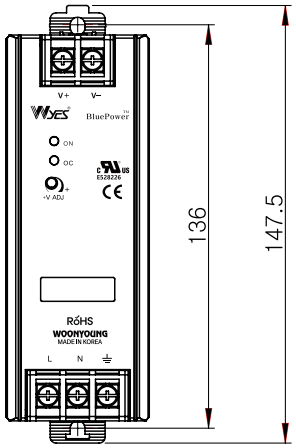

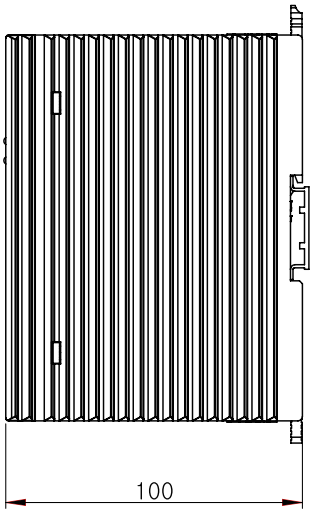

Terminal

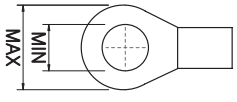

Max 6 , Min 3.5

DIN-RAIL DP TYPE Series(역률개선용) 200, 250W

UL 인증

PFC Type



Features

- Wide Input Voltage Range(AC90 ~ 264V)
- Built-in Active PFC function
- High Efficiency up to 91%
- Built-in Inrush Current Limiter
- SEMI - F47 (200VAC Only)
- Short Circuit Protection
- Auto-Restart Mode
- LED Indicator for Power on & Over Load
- Over Current Protection

DIN Rail 및 벽부 취부형 구조로 현장 작업시 간편하며 대량 설치시 면적을 최소로 줄일수 있는 Unit형 SMPS 입니다.

This is a unitized SMPS that is convenient to work on at sites and can reduce areas during large-scale installation as a DIN rail and wall attached structure.

Specifications

ITEM \ MODEL			WYSP-200S12DP	WYSP-200S24DP	WYSP-200S48DP	WYSP-250S12DP	WYSP-250S24DP	WYSP-250S48DP
SAFETY STANDARDS			IEC 62368-1:2018	IEC 62368-1:2018	IEC 62368-1:2018	IEC 62368-1:2018	IEC 62368-1:2018	IEC 62368-1:2018
INPUT	AC Input Volatage Nominal		AC 100 ~ 240 [V]					
	AC Input Volatage Range		AC 90 ~ 264 [V]					
	CURRENT	AC110 [V]	3.1 [A]					
		AC220 [V]	1.6 [A]					
	FREQUENCY		50/60 [Hz]					
	EFFICIENCY	AC110 [V]	91 [%]	92 [%]	92 [%]	91 [%]	92 [%]	92 [%]
		AC220 [V]	92 [%]	93 [%]	93 [%]	92 [%]	93 [%]	93 [%]
	POWER FACTOR		PF≥0.95(Half Load)					
	INRUSH CURRENT	AC110 [V]	30 [Apk] typ	30 [Apk] typ	30 [Apk] typ	30 [Apk] typ	30 [Apk] typ	30 [Apk] typ
		AC220 [V]	50 [Apk] typ	50 [Apk] typ	50 [Apk] typ	50 [Apk] typ	50 [Apk] typ	50 [Apk] typ
	STANDBY POWER	AC110 [V]	0.21W(DOE VI)					
		AC220 [V]						
	LEAKAGE CURRENT (60Hz)	AC110 [V]	MAX 0.5mA					
		AC220 [V]	MAX 1mA					
OUTPUT	VOLTAGE		12 [V]	24 [V]	48 [V]	12 [V]	24 [V]	48 [V]
	CURRENT		16.7 [A]	8.4 [A]	4.17 [A]	20.9 [A]	10.5 [A]	5.21 [A]
	LINE REGULATION		60 [mV] max	120 [mV] max	240 [mV] max	60 [mV] max	120 [mV] max	240 [mV] max
	LOAD REGULATION		240 [mV] max	480 [mV] max	720 [mV] max	240 [mV] max	480 [mV] max	720 [mV] max
	RIPPLE & NOISE		120 [mVp-p]	150 [mVp-p]	100 [mVp-p]	120 [mVp-p]	150 [mVp-p]	180 [mVp-p]
	TEMPERATURE DRIFT (0~50°C)		240[mV] max					
	START-UP TIME	AC110 [V]	2 [s] at Full Load					
		AC220 [V]						
	HOLD-UP TIME	AC110 [V]	12 [ms] at Full Load					
		AC220 [V]	50 [ms] at Full Load					
PROTECTION CIRCUIT	OVER CURRENT PROTECTION		Works over 140% of rating and recovers automatically (hiccup)					
	OVER VOLTAGE PROTECTION		15 ~ 22 [V]	27 ~ 35 [V]	50 ~ 70 [V]	15 ~ 22 [V]	27 ~ 35 [V]	50 ~ 70 [V]
			Re power on to recover (shut down)					
	OVER RATED INDICATION		Works over 105% of rating and recovers automatically(Red LED)					
WITHSTAND VOLTAGE	INPUT-OUTPUT		AC3,000V 1minute, Cutoff current = 20mA					
	INPUT-CASE, FG		AC2,000V 1minute, Cutoff current = 20mA					
	OUTPUT-CASE, FG		AC500V 1minute, Cutoff current = 30mA					
ISOLATION RESISTANCE	INPUT-OUTPUT		DC500V 50MΩ					
	INPUT-CASE, FG		DC500V, 50MΩ					
	OUTPUT-CASE, FG		DC100V 10MΩ					
ENVIRONMENT	OPERATING TEMP AND HUMID		-10 ~ 50°C, 20 ~ 90% rh (non condensing)					
	STORAGE TEMP AND HUMID		-20 ~ 70°C (non condensing)					
GENERAL	COOLING		Air					
	WEIGHT		1.0 [kg]					

DIN-RAIL DP TYPE Series(역률개선용) 300W

UL 인증

PFC Type



Features

- Wide Input Voltage Range(AC90 ~ 264V)
- Built-in Active PFC function
- High Efficiency up to 91%
- Built-in Inrush Current Limiter
- SEMI - F47 (200VAC Only)
- Short Circuit Protection
- Auto-Restart Mode
- LED Indicator for Power on & Over Load
- Over Current Protection

DIN Rail 및 벽부 취부형 구조로 현장 작업시 간편하며 대량 설치시 면적을 최소로 줄일수 있는 Unit형 SMPS 입니다.

This is a unitized SMPS that is convenient to work on at sites and can reduce areas during large-scale installation as a DIN rail and wall attached structure.

Specifications

ITEM \ MODEL			WYSP-300S12DP	WYSP-300S24DP	WYSP-300S48DP
SAFETY STANDARDS			CB CE IEC 62368-1:2018	cULus CB CE IEC 62368-1:2018	cULus CB CE IEC 62368-1:2018
INPUT	AC Input Volatage Nominal		AC 100 ~ 240 [V]		
	AC Input Volatage Range		AC 90 ~ 264 [V]		
	CURRENT	AC110 [V]	3.1 [A]	3.1 [A]	3.1 [A]
		AC220 [V]	1.6 [A]	1.6 [A]	1.6 [A]
	FREQUENCY		50/60 [Hz]		
	EFFICIENCY	AC110 [V]	91 [%]	92 [%]	92 [%]
		AC220 [V]	92 [%]	93 [%]	93 [%]
	POWER FACTOR		PF≥0.95(Half Load)		
	INRUSH CURRENT	AC110 [V]	30 [Apk] typ	30 [Apk] typ	30 [Apk] typ
		AC220 [V]	50 [Apk] typ	50 [Apk] typ	50 [Apk] typ
	STANDBY POWER	AC110 [V]	0.21W(DOE VI)		
		AC220 [V]			
	LEAKAGE CURRENT (60Hz)	AC110 [V]	MAX 0.5mA		
		AC220 [V]	MAX 1mA		
OUTPUT	VOLTAGE		12 [V]	24 [V]	48 [V]
	CURRENT		25.0 [A]	12.5 [A]	6.25 [A]
	LINE REGULATION		60 [mV] max	120 [mV] max	240 [mV] max
	LOAD REGULATION		240 [mV] max	480 [mV] max	720 [mV] max
	RIPPLE & NOISE		120 [mVp-p]	150 [mVp-p]	180 [mVp-p]
	TEMPERATURE DRIFT (0~50°C)		240[mV] max		
	START-UP TIME	AC110 [V]	2 [s] at Full Load		
		AC220 [V]			
	HOLD-UP TIME	AC110 [V]	12 [ms] at Full Load		
		AC220 [V]	50 [ms] at Full Load		
PROTECTION CIRCUIT	OVER CURRENT PROTECTION		Works over 140% of rating and recovers automatically (hiccup)		
	OVER VOLTAGE PROTECTION		15 ~ 22 [V]	27 ~ 35 [V]	50 ~ 70 [V]
			Re power on to recover (shut down)		
	OVER RATED INDICATION		Works over 105% of rating and recovers automatically(Red LED)		
WITHSTAND VOLTAGE	INPUT-OUTPUT		AC3,000V 1minute, Cutoff current = 20mA		
	INPUT-CASE, FG		AC2,000V 1minute, Cutoff current = 20mA		
	OUTPUT-CASE, FG		AC500V 1minute, Cutoff current = 30mA		
ISOLATION RESISTANCE	INPUT-OUTPUT		DC500V 50MΩ		
	INPUT-CASE, FG		DC500V, 50MΩ		
	OUTPUT-CASE, FG		DC100V 10MΩ		
ENVIRONMENT	OPERATING TEMP AND HUMID		-10 ~ 50°C, 20 ~ 90% rh (non condensing)		
	STORAGE TEMP AND HUMID		-20 ~ 70°C (non condensing)		
GENERAL	COOLING		Air		
	WEIGHT		1 [kg]		

DIN-RAIL DP TYPE Series(역률개선용) 200, 250, 300W

전면 부 명칭

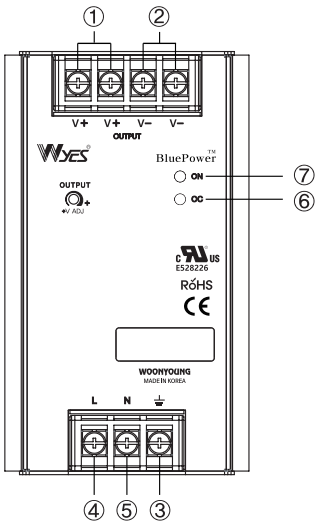

① + Output Terminal
② − Output Terminal
③ Frame Ground
④ AC Input (L)
⑤ AC Input (N)
⑥ Over Current LED (Red)
⑦ Output LED (Green)

Derating Curve For Ambient

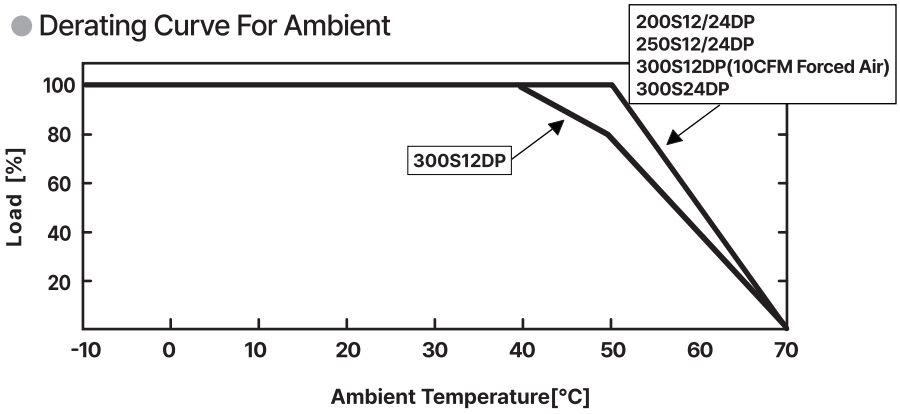

Derating Curve For Input Voltage

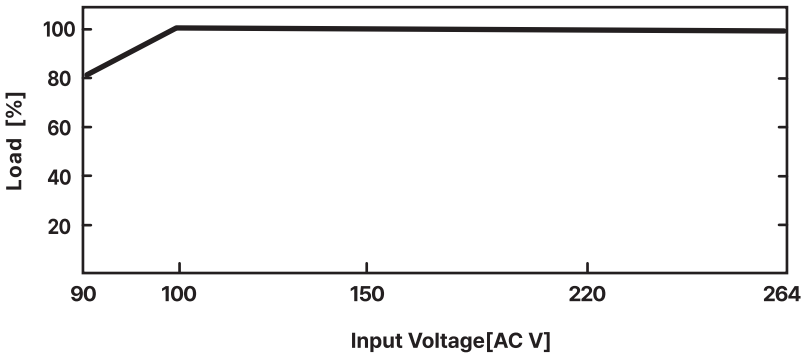

Dimension

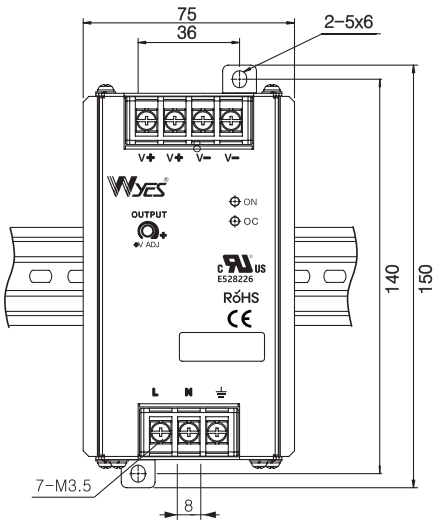

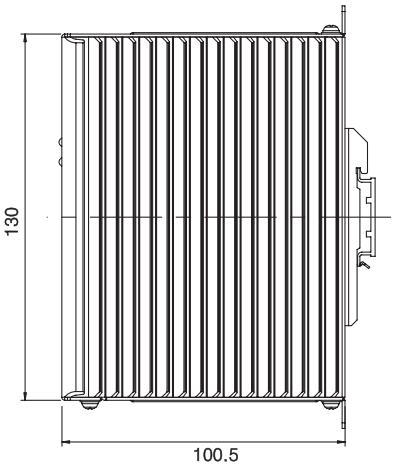

Option (WYSP−300S12DP)

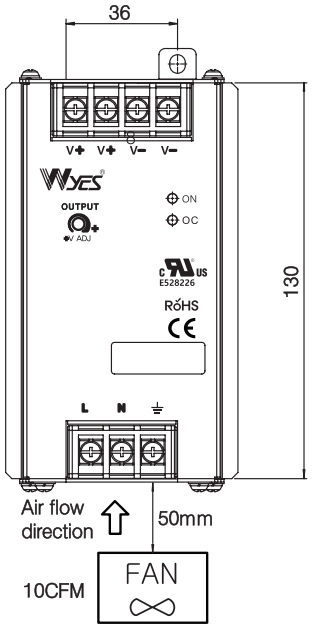

Terminal

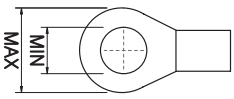

Max 7 , Min 3.5

DIN-RAIL DP TYPE Series(역률개선용) 400, 500W

UL 인증

PFC Type



Features

- Wide Input Voltage Range(AC90 ~ 264V)
- Built-in Inrush Current Limitter
- Over Current Protection
- Short Circuit Protection
- Over Temperature Protection
- Auto-Restart Mode
- Built-in PFC
- SEMI - F47 (200VAC Only)

본 대용량 제품은 DIN Rail 및 벽부 취부형 구조로 각종 분진이 존재하는 산업현장에 최적화된 Fanless 설계에 따라 효율이 높은 공진형 회로방식과 동기정류회로가 채택된 제품입니다.

This large-capacity product is a product adopting a resonance converter and a synchronous rectification circuit with high efficiency according to a fan-less design optimized to industrial sites with various dusts as a DIN rail and wall attached structure.

Specifications

ITEM \ MODEL			WYSP-400S24DP	WYSP-400S48DP	WYSP-500S24DP	WYSP-500S48DP
SAFETY STANDARDS			IEC 62368-1:2018	IEC 62368-1:2018	IEC 62368-1:2018	IEC 62368-1:2018
INPUT	AC Input Volatage Nominal		AC 100 ~ 240 [V]			
			AC 90 ~ 264 [V]			
	CURRENT	AC110 [V]	5.5 [A]			
		AC220 [V]	2.5 [A]			
	FREQUENCY		50/60 [Hz]			
	EFFICIENCY	AC110 [V]	92 [%]	92 [%]	92 [%]	92 [%]
		AC220 [V]	94 [%]	94 [%]	94 [%]	94 [%]
	POWER FACTOR		PF≥0.95(Half Load)			
	INRUSH CURRENT	AC110 [V]	30 [Apk] typ		30 [Apk] typ	
		AC220 [V]	50 [Apk] typ		50 [Apk] typ	
	STANDBY POWER	AC110 [V]	0.3W(DOE VI)			
		AC220 [V]				
	LEAKAGE CURRENT (60Hz)	AC110 [V]	MAX 0.5mA			
		AC220 [V]	MAX 1mA			
OUTPUT	VOLTAGE		24 [V]	48 [V]	24 [V]	48 [V]
	CURRENT		16.7 [A]	8.4 [A]	20.9 [A]	10.5 [A]
	LINE REGULATION		120 [mV] max	240 [mV] max	120 [mV] max	240 [mV] max
	LOAD REGULATION		480 [mV] max	720 [mV] max	480 [mV] max	720 [mV] max
	RIPPLE & NOISE		240 [mVp-p]	100 [mVp-p]	240 [mVp-p]	180 [mVp-p]
	TEMPERATURE DRIFT (0~50°C)		240[mV] max			
	START-UP TIME	AC110 [V]	1 [s] at Full Load			
		AC220 [V]				
	HOLD-UP TIME	AC110 [V]	16 [ms] at Full Load			
		AC220 [V]	60 [ms] at Full Load			
PROTECTION CIRCUIT	OVER CURRENT PROTECTION		Works over 140% of rating and recovers automatically (hiccup)			
	OVER VOLTAGE PROTECTION		27 ~ 35 [V]	50 ~ 70 [V]	27 ~ 35 [V]	50 ~ 70 [V]
			Re power on to recover (shut down)			
	OVER RATED INDICATION		Works over 105% of rating and recovers automatically(Red LED)			
WITHSTAND VOLTAGE	INPUT-OUTPUT		AC3,000V 1minute, Cutoff current = 20mA			
	INPUT-CASE, FG		AC2,000V 1minute, Cutoff current = 20mA			
	OUTPUT-CASE, FG		AC500V 1minute, Cutoff current = 30mA			
ISOLATION RESISTANCE	INPUT-OUTPUT		DC500V 50MΩ			
	INPUT-CASE, FG		DC500V, 50MΩ			
	OUTPUT-CASE, FG		DC100V 10MΩ			
ENVIRONMENT	OPERATING TEMP AND HUMID		-10 ~ 50°C, 20 ~ 90% rh (non condensing)			
	STORAGE TEMP AND HUMID		-20 ~ 70°C (non condensing)			
GENERAL	COOLING		Air			
	WEIGHT		1.3 [kg]			

DIN-RAIL DP TYPE Series(역률개선용) 400, 500W

전면 부 명칭

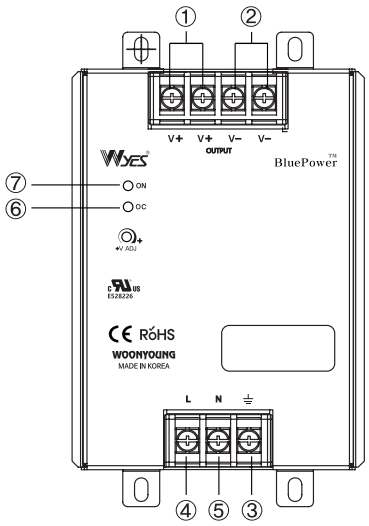

① + Output Terminal
② − Output Terminal
③ Frame Ground
④ AC Input (L)
⑤ AC Input (N)
⑥ Over Current LED (Red)
⑦ Output LED (Green)

Derating Curve For Ambient

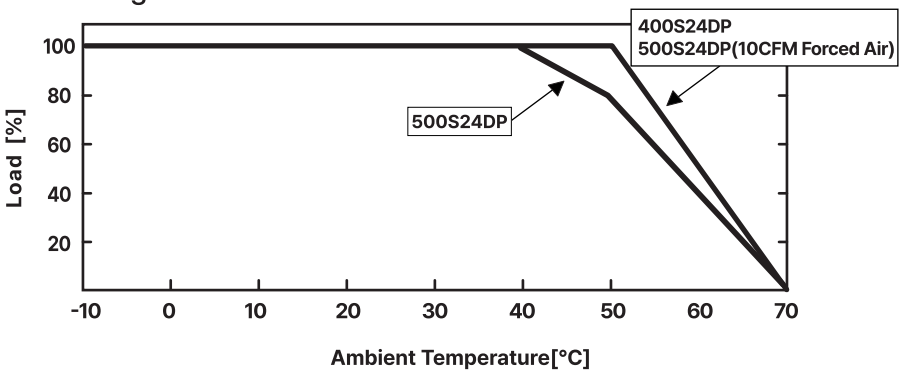

Derating Curve For Input Voltage

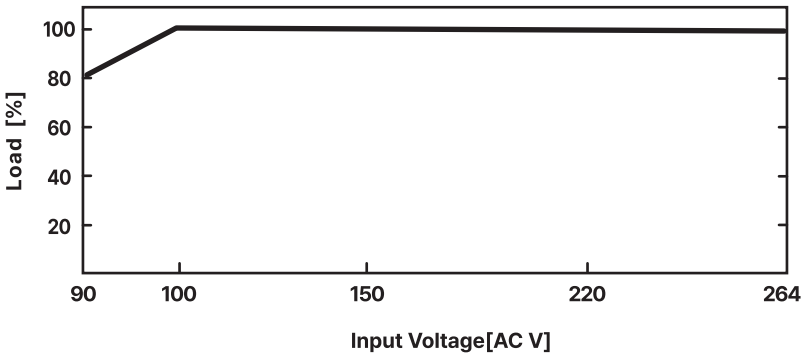

Dimension

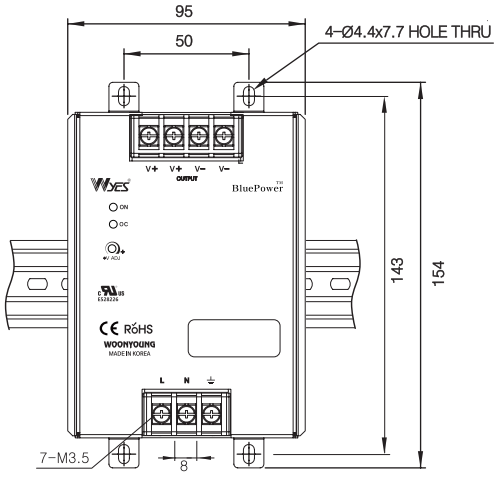

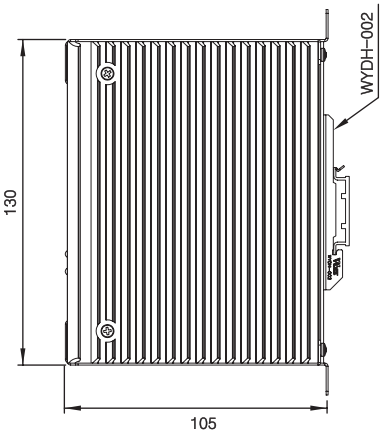

Option (WYSP−500S24DP)

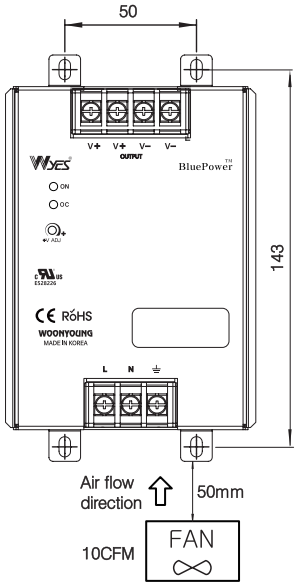

Terminal

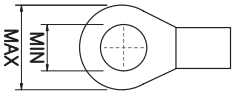

Max 7 , Min 3.5

DIN-RAIL **DD TYPE** Series 10, 20W

CE RoHS



Features

- Wide Input Voltage Range (DC 100~250V)
- Built-in Inrush Current Limitter
- Over Current Protection
- Short Circuit Protection
- LED Indicator for Power On & Over Load
- Auto－Restart Mode
- High Efficiency

DIN Rail 취부형 구조로 현장 작업시 간편하며 대량 설치 시 면적을 최소로 줄일수 있으며, 직접 벽부에 설치할 수 있도록 제품 하부에 Wall mount 레버가 장착되어 있어 활용범위가 넓은 Unit형 SMPS입니다.

This is a unitized SMPS that is convenient to work on at sites, can reduce areas during large-scale installation, and has a wall-mount lever at its bottom for direct installation on walls to be wide in application scope as a DIN rail and wall attached structure.

Specifications

ITEM \ MODEL			WYSP－10S05DD	WYSP－10S12DD	WYSP－10S24DD	WYSP－20S12DD	WYSP－20S24DD
SAFETY STANDARDS			CE IEC 60950－1:2013	CE IEC 62368－1:2018	CE IEC 62368－1:2018	CE IEC 62368－1:2018	CE IEC 62368－1:2018
INPUT	DC Input Volatage Nominal		DC 110 ～ 230 [V]				
	DC Input Volatage Range		DC 100 ～ 250 [V]				
	CURRENT	DC 150 [V]	0.1 [A]			0.2 [A]	
	EFFICIENCY	DC 150 [V]	70 [%]	73 [%]	71 [%]	78 [%]	78 [%]
	INRUSH CURRENT	DC 150 [V]	20 [Apk] typ				
	STANDBY POWER	DC 150 [V]	0.3W(DOE VI)				
	LEAKAGE CURRENT	DC 150 [V]	MAX 0.5mA				
OUTPUT	VOLTAGE		5 [V]	12 [V]	24 [V]	12 [V]	24 [V]
	CURRENT		2.0 [A]	0.84 [A]	0.42 [A]	1.67 [A]	0.84 [A]
	LINE REGULATION		60 [mV] max	60 [mV] max	120 [mV] max	60 [mV] max	120 [mV] max
	LOAD REGULATION		240 [mV] max	240 [mV] max	480 [mV] max	240 [mV] max	480 [mV] max
	RIPPLE & NOISE		120 [mVp－p]	100 [mVp－p]	100 [mVp－p]	100 [mVp－p]	100 [mVp－p]
	TEMPERATURE DRIFT (0～50°C)		240[mV] max				
	START-UP TIME	DC 150 [V]	2 [s] at Full Load				
	HOLD-UP TIME	DC 150 [V]	15 [ms] at Full Load				
PROTECTION CIRCUIT	OVER CURRENT PROTECTION		Works over 140% of rating and recovers automatically (hiccup)				
	OVER VOLTAGE PROTECTION		6 ～ 10[V]	15 ～ 22 [V]	27 ～ 35 [V]	15 ～ 22 [V]	27 ～ 35 [V]
			Re power on to recover (shut down)				
	OVER RATED INDICATION		Works over 105% of rating and recovers automatically (Red LED)				
WITHSTAND VOLTAGE	INPUT－OUTPUT		AC 1,500V 1minute, Cutoff current = 20mA				
	INPUT－CASE, FG		AC 1,500V 1minute, Cutoff current = 20mA				
	OUTPUT－CASE, FG		AC 500V 1minute, Cutoff current = 30mA				
ISOLATION RESISTANCE	INPUT－OUTPUT		DC 500V 50MΩ				
	INPUT－CASE, FG		DC 500V, 50MΩ				
	OUTPUT－CASE, FG		DC 100V 10MΩ				
ENVIRONMENT	OPERATING TEMP AND HUMID		－10 ～ 50°C, 20 ～ 90% rh (non condensing)				
	STORAGE TEMP AND HUMID		－20 ～ 70°C (non condensing)				
GENERAL	COOLING		Air				
	WEIGHT		0.2 [kg]				

DIN-RAIL **DD TYPE** Series 10, 20W

Front part name

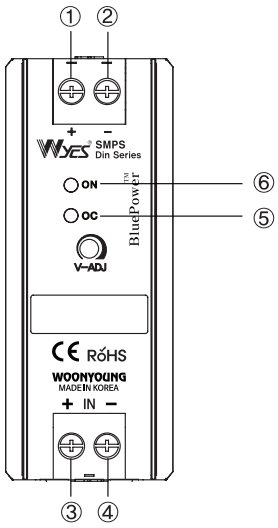

① + Output Terminal
② − Output Terminal
③ DC Input (+)
④ DC Input (−)
⑤ Over Current LED (Red)
⑥ Output LED (Green)

Derating Curve For Ambient

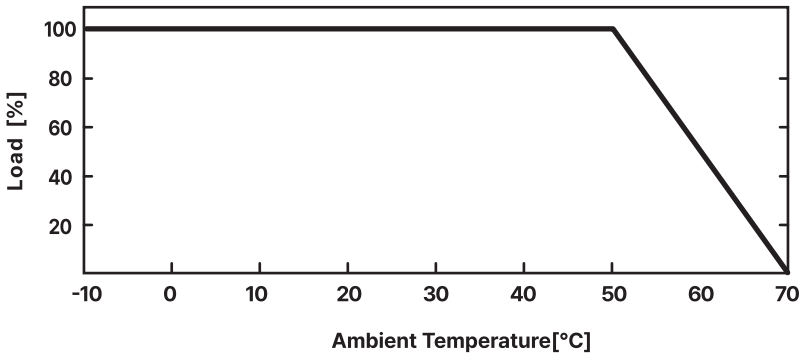

Derating Curve For Input Voltage

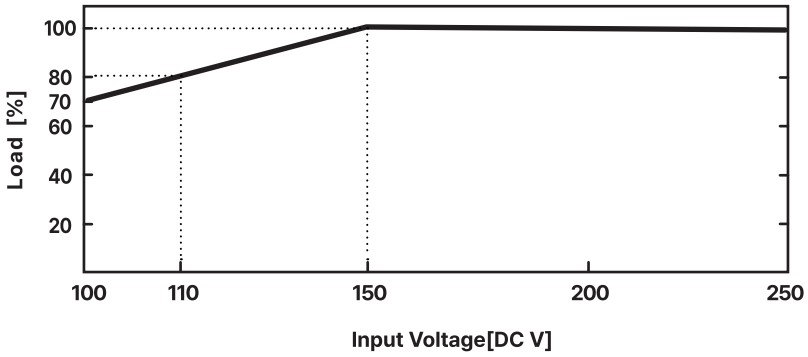

Dimension

DIN-Rail Mount

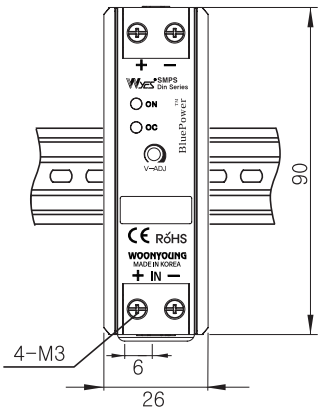

Wall Mount

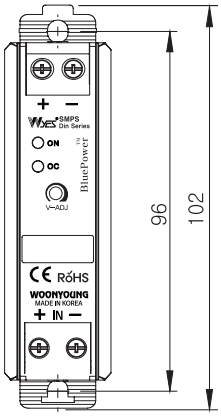

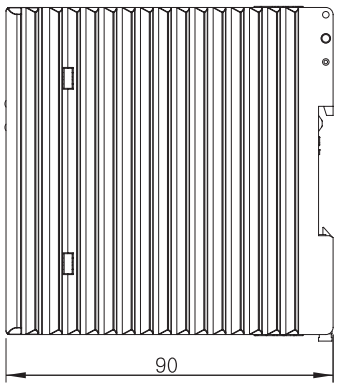

Terminal

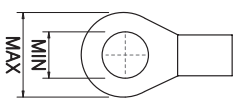

Max 5 , Min 3

DIN-RAIL **DD TYPE** Series 30W

CE RoHS



Features

- Wide Input Voltage Range (DC 100~250V)
- Built-in Inrush Current Limitter
- Over Current Protection
- Short Circuit Protection
- LED Indicator for Power On & Over Load
- Auto－Restart Mode
- High Efficiency

DIN Rail 취부형 구조로 현장 작업시 간편하며 대량 설치 시 면적을 최소로 줄일수 있으며, 직접 벽부에 설치할 수 있도록 제품 하부에 Wall mount 레버가 장착되어 있어 활용범위가 넓은 Unit형 SMPS입니다.

This is a unitized SMPS that is convenient to work on at sites, can reduce areas during large-scale installation, and has a wall-mount lever at its bottom for direct installation on walls to be wide in application scope as a DIN rail and wall attached structure.

Specifications

ITEM \ MODEL			WYSP－30S05DD	WYSP－30S12DD	WYSP－30S24DD	WYSP－30S48DD
SAFETY STANDARDS			CE IEC 60950－1:2013	CE IEC 62368－1:2018	CE IEC 62368－1:2018	CE IEC 62368－1:2018
INPUT	DC Input Volatage Nominal		DC 110 ～ 230 [V]			
	DC Input Volatage Range		DC 100 ～ 250 [V]			
	CURRENT	DC 150 [V]	0.3 [A]			
	EFFICIENCY	DC 150 [V]	70 [%]	87 [%]	87 [%]	87 [%]
	INRUSH CURRENT	DC 150 [V]	20 [Apk] typ	20 [Apk] typ	30 [Apk] typ	30 [Apk] typ
	STANDBY POWER	DC 150 [V]	0.3W(DOE VI)			
	LEAKAGE CURRENT	DC 150 [V]	MAX 0.5mA			
OUTPUT	VOLTAGE		5 [V]	12 [V]	24 [V]	48 [V]
	CURRENT		6.0 [A]	2.5 [A]	1.3 [A]	0.63 [A]
	LINE REGULATION		60 [mV] max	60 [mV] max	120 [mV] max	240 [mV] max
	LOAD REGULATION		240 [mV] max	240 [mV] max	480 [mV] max	720 [mV] max
	RIPPLE & NOISE		120 [mVp－p]	100 [mVp－p]	100 [mVp－p]	180 [mVp－p]
	TEMPERATURE DRIFT (0～50°C)		240[mV] max			
	START-UP TIME	DC 150 [V]	2 [s] at Full Load			
	HOLD-UP TIME	DC 150 [V]	15 [ms] at Full Load			
PROTECTION CIRCUIT	OVER CURRENT PROTECTION		Works over 140% of rating and recovers automatically (hiccup)			
	OVER VOLTAGE PROTECTION		6 ～ 10[V]	15 ～ 22 [V]	27 ～ 35 [V]	50 ～ 70 [V]
			Re power on to recover (shut down)			
	OVER RATED INDICATION		Works over 105% of rating and recovers automatically (Red LED)			
WITHSTAND VOLTAGE	INPUT－OUTPUT		AC 3,000V 1minute, Cutoff current = 20mA			
	INPUT－CASE, FG		AC 2,000V 1minute, Cutoff current = 20mA			
	OUTPUT－CASE, FG		AC 500V 1minute, Cutoff current = 30mA			
ISOLATION RESISTANCE	INPUT－OUTPUT		DC 500V 50MΩ			
	INPUT－CASE, FG		DC 500V, 50MΩ			
	OUTPUT－CASE, FG		DC 100V 10MΩ			
ENVIRONMENT	OPERATING TEMP AND HUMID		－10 ～ 50°C, 20 ～ 90% rh (non condensing)			
	STORAGE TEMP AND HUMID		－20 ～ 70°C (non condensing)			
GENERAL	COOLING		Air			
	WEIGHT		0.3 [kg]			

DIN-RAIL **DD TYPE** Series 50W

CE RoHS



Features

- Wide Input Voltage Range (DC 100~250V)
- Built-in Inrush Current Limitter
- Over Current Protection
- Short Circuit Protection
- LED Indicator for Power On & Over Load
- Auto－Restart Mode
- High Efficiency

DIN Rail 취부형 구조로 현장 작업시 간편하며 대량 설치 시 면적을 최소로 줄일수 있으며, 직접 벽부에 설치할 수 있도록 제품 하부에 Wall mount 레버가 장착되어 있어 활용범위가 넓은 Unit형 SMPS입니다.

This is a unitized SMPS that is convenient to work on at sites, can reduce areas during large-scale installation, and has a wall-mount lever at its bottom for direct installation on walls to be wide in application scope as a DIN rail and wall attached structure.

Specifications

ITEM \ MODEL			WYSP－50S12DD	WYSP－50S24DD	WYSP－50S48DD
SAFETY STANDARDS			CE IEC 62368－1:2018	CE IEC 62368－1:2018	CE IEC 62368－1:2018
INPUT	DC Input Volatage Nominal		DC 110 ～ 230 [V]		
	DC Input Volatage Range		DC 100 ～ 250 [V]		
	CURRENT	DC 150 [V]	0.4 [A]		
	EFFICIENCY	DC 150 [V]	87 [%]	88 [%]	88 [%]
	INRUSH CURRENT	DC 150 [V]	20 [Apk] typ	30 [Apk] typ	30 [Apk] typ
	STANDBY POWER	DC 150 [V]	0.3W(DOE VI)		
	LEAKAGE CURRENT	DC 150 [V]	MAX 0.5mA		
OUTPUT	VOLTAGE		12 [V]	24 [V]	48 [V]
	CURRENT		4.2 [A]	2.1 [A]	1.1 [A]
	LINE REGULATION		60 [mV] max	120 [mV] max	240 [mV] max
	LOAD REGULATION		240 [mV] max	480 [mV] max	720 [mV] max
	RIPPLE & NOISE		100 [mVp－p]	100 [mVp－p]	180 [mVp－p]
	TEMPERATURE DRIFT (0～50°C)		240[mV] max		
	START-UP TIME	DC 150 [V]	2 [s] at Full Load		
	HOLD-UP TIME	DC 150 [V]	12 [ms] at Full Load		
PROTECTION CIRCUIT	OVER CURRENT PROTECTION		Works over 140% of rating and recovers automatically (hiccup)		
	OVER VOLTAGE PROTECTION		15 ～ 22 [V]	27 ～ 35 [V]	50 ～ 70 [V]
			Re power on to recover (shut down)		
	OVER RATED INDICATION		Works over 105% of rating and recovers automatically (Red LED)		
WITHSTAND VOLTAGE	INPUT－OUTPUT		AC 3,000V 1minute, Cutoff current = 20mA		
	INPUT－CASE, FG		AC 2,000V 1minute, Cutoff current = 20mA		
	OUTPUT－CASE, FG		AC 500V 1minute, Cutoff current = 30mA		
ISOLATION RESISTANCE	INPUT－OUTPUT		DC 500V 50MΩ		
	INPUT－CASE, FG		DC 500V, 50MΩ		
	OUTPUT－CASE, FG		DC 100V 10MΩ		
ENVIRONMENT	OPERATING TEMP AND HUMID		－10 ～ 50°C, 20 ～ 90% rh (non condensing)		
	STORAGE TEMP AND HUMID		－20 ～ 70°C (non condensing)		
GENERAL	COOLING		Air		
	WEIGHT		0.4 [kg]		

Front part name

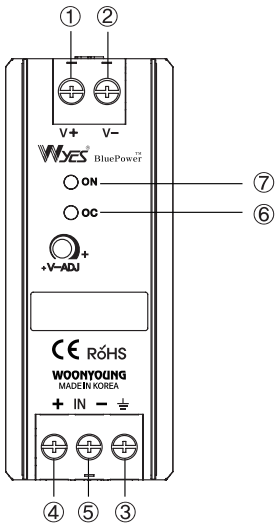

① ＋ Output Terminal
② － Output Terminal
③ Frame Ground
④ DC Input (+)
⑤ DC Input (−)
⑥ Over Current LED (Red)
⑦ Output LED (Green)

Derating Curve For Ambient

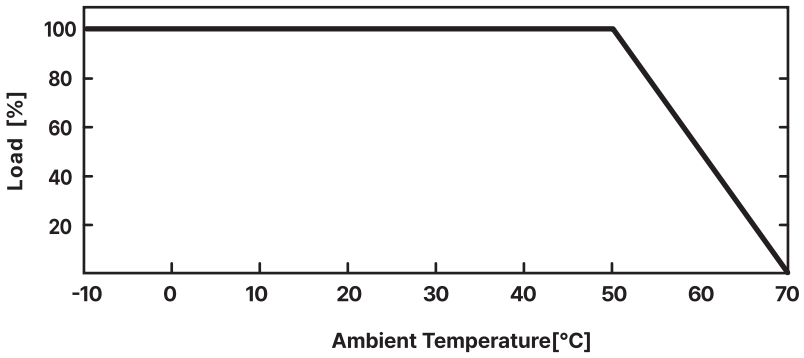

Derating Curve For Input Voltage

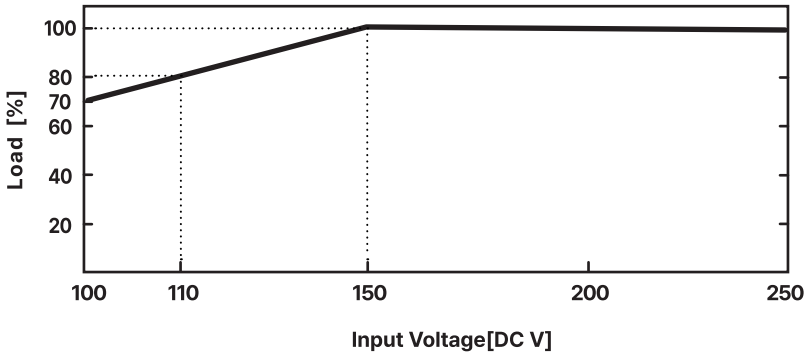

Dimension

DIN-Rail Mount

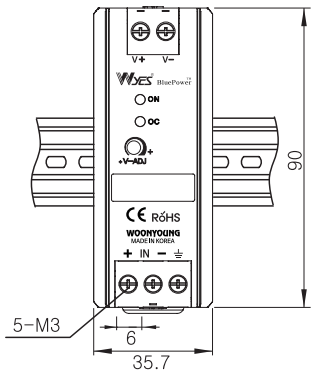

Wall Mount

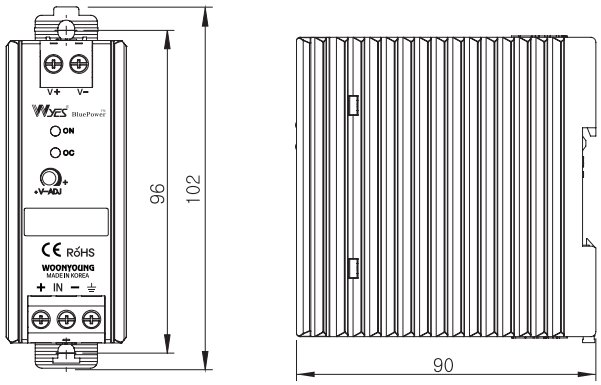

Terminal

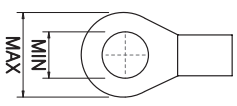

Max 6 , Min 3.5

DIN-RAIL **DD TYPE** Series 75W

CE RoHS



Features

- Wide Input Voltage Range (DC 100~250V)
- Built-in Inrush Current Limitter
- Over Current Protection
- Short Circuit Protection
- LED Indicator for Power On & Over Load
- Auto－Restart Mode
- High Efficiency

DIN Rail 취부형 구조로 현장 작업시 간편하며 대량 설치 시 면적을 최소로 줄일수 있으며, 직접 벽부에 설치할 수 있도록 제품 하부에 Wall mount 레버가 장착되어 있어 활용범위가 넓은 Unit형 SMPS입니다.

This is a unitized SMPS that is convenient to work on at sites, can reduce areas during large-scale installation, and has a wall-mount lever at its bottom for direct installation on walls to be wide in application scope as a DIN rail and wall attached structure.

Specifications

ITEM \ MODEL			WYSP－75S12DD	WYSP－75S24DD	WYSP－75S48DD
SAFETY STANDARDS			CE IEC 62368－1:2018	CE IEC 62368－1:2018	CE IEC 62368－1:2018
INPUT	DC Input Volatage Nominal		DC 110 ～ 230 [V]		
	DC Input Volatage Range		DC 100 ～ 250 [V]		
	CURRENT	DC 150 [V]	0.6 [A]		
	EFFICIENCY	DC 150 [V]	90 [%]	91 [%]	91 [%]
	INRUSH CURRENT	DC 150 [V]	30 [Apk] typ	30 [Apk] typ	30 [Apk] typ
	STANDBY POWER	DC 150 [V]	0.3W(DOE VI)		
	LEAKAGE CURRENT	DC 150 [V]	MAX 3.5mA		
OUTPUT	VOLTAGE		12 [V]	24 [V]	48 [V]
	CURRENT		6.3 [A]	3.2 [A]	1.6 [A]
	LINE REGULATION		60 [mV] max	120 [mV] max	240 [mV] max
	LOAD REGULATION		240 [mV] max	480 [mV] max	720 [mV] max
	RIPPLE & NOISE		100 [mVp-p]	100 [mVp-p]	180 [mVp-p]
	TEMPERATURE DRIFT (0～50°C)		240[mV] max		
	START-UP TIME	DC 150 [V]	1 [s] at Full Load		
	HOLD-UP TIME	DC 150 [V]	16 [ms] at Full Load		
PROTECTION CIRCUIT	OVER CURRENT PROTECTION		Works over 140% of rating and recovers automatically (hiccup)		
	OVER VOLTAGE PROTECTION		15 ～ 22 [V]	27 ～ 35 [V]	50 ～ 70 [V]
			Re power on to recover (shut down)		
	OVER RATED INDICATION		Works over 105% of rating and recovers automatically (Red LED)		
WITHSTAND VOLTAGE	INPUT－OUTPUT		AC 3,000V 1minute, Cutoff current = 20mA		
	INPUT－CASE, FG		AC 2,000V 1minute, Cutoff current = 20mA		
	OUTPUT－CASE, FG		AC 500V 1minute, Cutoff current = 30mA		
ISOLATION RESISTANCE	INPUT－OUTPUT		DC 500V 50MΩ		
	INPUT－CASE, FG		DC 500V, 50MΩ		
	OUTPUT－CASE, FG		DC 100V 10MΩ		
ENVIRONMENT	OPERATING TEMP AND HUMID		－10 ～ 50°C, 20 ～ 90% rh (non condensing)		
	STORAGE TEMP AND HUMID		－20 ～ 70°C (non condensing)		
GENERAL	COOLING		Air		
	WEIGHT		0.4 [kg]		

DIN-RAIL **DD TYPE** Series 100W

CE RoHS



Features

- Wide Input Voltage Range (DC 100~250V)
- Built-in Inrush Current Limitter
- Over Current Protection
- Short Circuit Protection
- LED Indicator for Power On & Over Load
- Auto－Restart Mode
- High Efficiency

DIN Rail 취부형 구조로 현장 작업시 간편하며 대량 설치 시 면적을 최소로 줄일수 있으며, 직접 벽부에 설치할 수 있도록 제품 하부에 Wall mount 레버가 장착되어 있어 활용범위가 넓은 Unit형 SMPS입니다.

This is a unitized SMPS that is convenient to work on at sites, can reduce areas during large-scale installation, and has a wall-mount lever at its bottom for direct installation on walls to be wide in application scope as a DIN rail and wall attached structure.

Specifications

ITEM \ MODEL			WYSP－100S12DD	WYSP－100S24DD	WYSP－100S48DD
SAFETY STANDARDS			CE IEC 62368－1:2018	CE IEC 62368－1:2018	CE IEC 62368－1:2018
INPUT	DC Input Volatage Nominal		DC 110 ～ 230 [V]		
	DC Input Volatage Range		DC 100 ～ 250 [V]		
	CURRENT	DC 150 [V]	0.8 [A]		
	EFFICIENCY	DC 150 [V]	90 [%]	91 [%]	91 [%]
	INRUSH CURRENT	DC 150 [V]	30 [Apk] typ	30 [Apk] typ	30 [Apk] typ
	STANDBY POWER	DC 150 [V]	0.3W(DOE VI)		
	LEAKAGE CURRENT	DC 150 [V]	MAX 3.5mA		
OUTPUT	VOLTAGE		12 [V]	24 [V]	48 [V]
	CURRENT		8.4 [A]	4.2 [A]	2.1 [A]
	LINE REGULATION		60 [mV] max	120 [mV] max	240 [mV] max
	LOAD REGULATION		240 [mV] max	480 [mV] max	720 [mV] max
	RIPPLE & NOISE		100 [mVp－p]	100 [mVp－p]	180 [mVp－p]
	TEMPERATURE DRIFT (0～50°C)		240[mV] max		
	START-UP TIME	DC 150 [V]	1 [s] at Full Load		
	HOLD-UP TIME	DC 150 [V]	16 [ms] at Full Load		
PROTECTION CIRCUIT	OVER CURRENT PROTECTION		Works over 140% of rating and recovers automatically (hiccup)		
	OVER VOLTAGE PROTECTION		15 ～ 22 [V]	27 ～ 35 [V]	50 ～ 70 [V]
			Re power on to recover (shut down)		
	OVER RATED INDICATION		Works over 105% of rating and recovers automatically (Red LED)		
WITHSTAND VOLTAGE	INPUT－OUTPUT		AC 3,000V 1minute, Cutoff current = 20mA		
	INPUT－CASE, FG		AC 2,000V 1minute, Cutoff current = 20mA		
	OUTPUT－CASE, FG		AC 500V 1minute, Cutoff current = 30mA		
ISOLATION RESISTANCE	INPUT－OUTPUT		DC 500V 50MΩ		
	INPUT－CASE, FG		DC 500V, 50MΩ		
	OUTPUT－CASE, FG		DC 100V 10MΩ		
ENVIRONMENT	OPERATING TEMP AND HUMID		－10 ～ 50°C, 20 ～ 90% rh (non condensing)		
	STORAGE TEMP AND HUMID		－20 ～ 70°C (non condensing)		
GENERAL	COOLING		Air		
	WEIGHT		0.6 [kg]		

DIN-RAIL **DD TYPE** Series 75, 100W

CE RoHS

Front part name

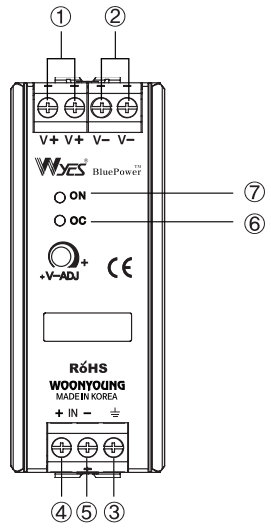

① + Output Terminal
② − Output Terminal
③ Frame Ground
④ DC Input (+)
⑤ DC Input (−)
⑥ Over Current LED (Red)
⑦ Output LED (Green)

Derating Curve For Ambient

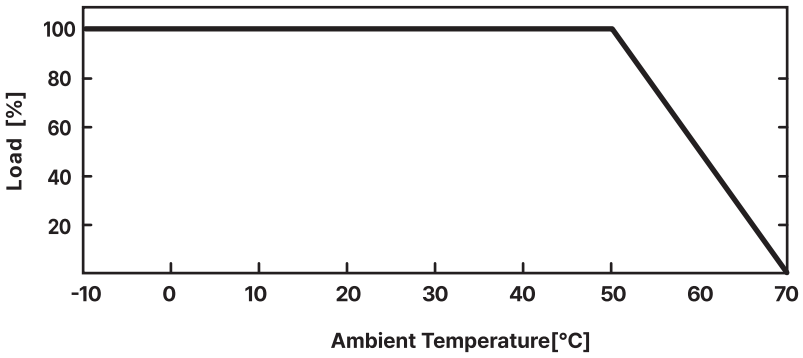

Derating Curve For Input Voltage

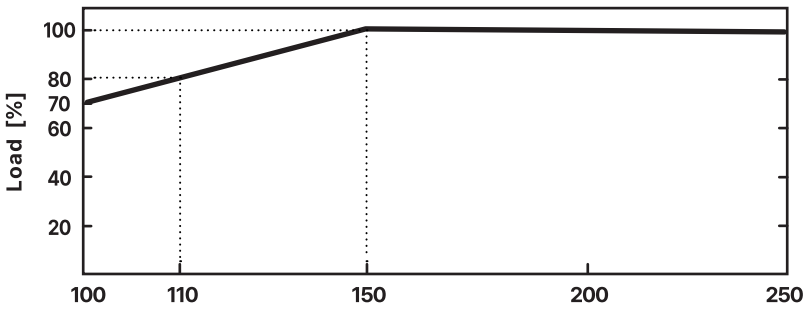

Dimension

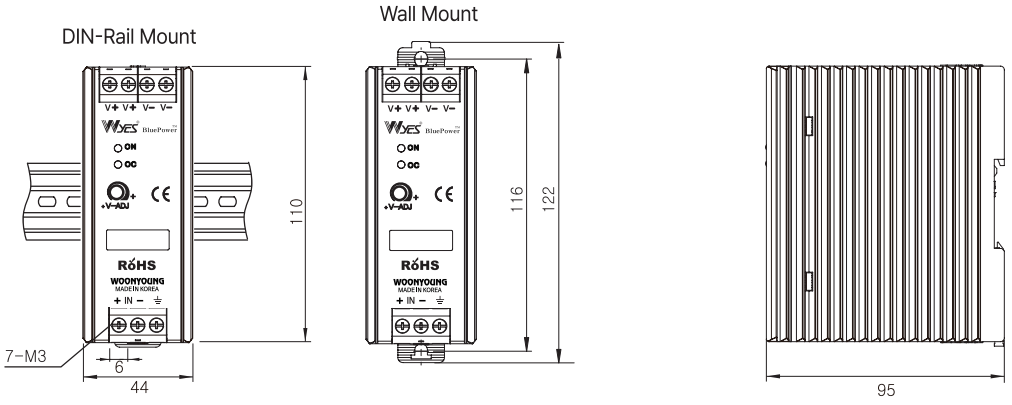

Terminal

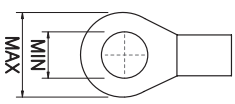

Max 6 , Min 3.5

DIN-RAIL **DD TYPE** Series 75, 100W

CE RoHS



Features

- Input Voltage Range (DC 100~250V)
- Built－in Inrush Current Limitter
- Over Current Protection
- Short Circuit Protection
- LED Indicator for Power On & Over Load
- Auto-Restart Mode
- High Efficiency

DIN Rail 및 벽부 취부형 구조로 현장 작업시 간편하며 대량 설치시 면적을 최소로 줄일수 있는 Unit형 SMPS 입니다.

This is a unitized SMPS that is convenient to work on at sites and can reduce areas during large-scale installation as a DIN rail and wall attached structure.

Specifications

ITEM \ MODEL			WYSP-75S12DD	WYSP-75S24DD	WYSP-75S48DD	WYSP-100S12DD	WYSP-100S24DD	WYSP-100S48DD
SAFETY STANDARDS			CE IEC 62368－1:2018	CE IEC 62368－1:2018	CE IEC 62368－1:2018	CE IEC 62368－1:2018	CE IEC 62368－1:2018	CE IEC 62368－1:2018
INPUT	DC Input Volatage Nominal		DC 110 ～ 230 [V]					
	DC Input Volatage Range		DC 100 ～ 250 [V]					
	CURRENT	DC 150 [V]	0.6 [A]			0.8 [A]		
	EFFICIENCY	DC 150 [V]	89 [%]	90 [%]	90 [%]	89 [%]	90 [%]	90 [%]
	INRUSH CURRENT	DC 150 [V]	30 [Apk] typ	30 [Apk] typ	30 [Apk] typ	30 [Apk] typ	30 [Apk] typ	30 [Apk] typ
	STANDBY POWER	DC 150 [V]	0.3W(DOE VI)					
	LEAKAGE CURRENT	DC 150 [V]	MAX 0.5mA					
OUTPUT	VOLTAGE		12 [V]	24 [V]	48 [V]	12 [V]	24 [V]	48 [V]
	CURRENT		6.3 [A]	3.2 [A]	1.6 [A]	8.4 [A]	4.2 [A]	2.1 [A]
	LINE REGULATION		120 [mV] max	120 [mV] max	240 [mV] max	120 [mV] max	120 [mV] max	240 [mV] max
	LOAD REGULATION		240 [mV] max	240 [mV] max	720 [mV] max	240 [mV] max	240 [mV] max	720 [mV] max
	RIPPLE & NOISE		120 [mVp-p]	150 [mVp－p]	100 [mVp－p]	120 [mVp－p]	150 [mVp－p]	180 [mVp－p]
	TEMPERATURE DRIFT (0～50°C)		240[mV] max					
	START-UP TIME	DC 150 [V]	3 [s] at Full Load					
	HOLD-UP	DC 150 [V]	15 [ms] at Full Load					
PROTECTION CIRCUIT	OVER CURRENT PROTECTION		Works over 140% of rating and recovers automatically (hiccup)					
	OVER VOLTAGE PROTECTION		15 ～ 22 [V]	27 ～ 35 [V]	50 ～ 70 [V]	15 ～ 22 [V]	27 ～ 35 [V]	50 ～ 70 [V]
			Re power on to recover (shut down)					
	OVER RATED INDICATION		Works over 105% of rating and recovers automatically (Red LED)					
WITHSTAND VOLTAGE	INPUT－OUTPUT		AC 3,000V 1minute, Cutoff current = 20mA					
	INPUT－CASE, FG		AC 2,000V 1minute, Cutoff current = 20mA					
	OUTPUT－CASE, FG		AC 500V 1minute, Cutoff current = 30mA					
ISOLATION RESISTANCE	INPUT－OUTPUT		DC 500V 50MΩ					
	INPUT－CASE, FG		DC 500V, 50MΩ					
	OUTPUT－CASE, FG		DC 100V 10MΩ					
ENVIRONMENT	OPERATING TEMP AND HUMID		－10 ～ 50°C, 20 ～ 90% rh (non condensing)					
	STORAGE TEMP AND HUMID		－20 ～ 70°C (non condensing)					
GENERAL	COOLING		Air					
	WEIGHT		1.0 [kg]					

DIN-RAIL **DD TYPE** Series 120, 150W

CE RoHS



Features

- Input Voltage Range (DC 100~250V)
- Built-in Inrush Current Limitter
- Over Current Protection
- Short Circuit Protection
- LED Indicator for Power On & Over Load
- Auto-Restart Mode
- High Efficiency

DIN Rail 및 벽부 취부형 구조로 현장 작업시 간편하며 대량 설치시 면적을 최소로 줄일수 있는 Unit형 SMPS 입니다.

This is a unitized SMPS that is convenient to work on at sites and can reduce areas during large-scale installation as a DIN rail and wall attached structure.

Specifications

ITEM \ MODEL			WYSP-120S12DD	WYSP-120S24DD	WYSP-120S48DD	WYSP-150S12DD	WYSP-150S24DD	WYSP-150S48DD
SAFETY STANDARDS			CE IEC 62368-1:2018	CE IEC 62368-1:2018	CE IEC 62368-1:2018	CE IEC 62368-1:2018	CE IEC 62368-1:2018	CE IEC 62368-1:2018
INPUT	DC Input Volatage Nominal		DC 110 ~ 230 [V]					
	DC Input Volatage Range		DC 100 ~ 250 [V]					
	CURRENT	DC 150 [V]	1.0 [A]			1.2 [A]		
	EFFICIENCY	DC 150 [V]	89 [%]	90 [%]	90 [%]	89 [%]	90 [%]	90 [%]
	INRUSH CURRENT	DC 150 [V]	30 [Apk] typ	30 [Apk] typ	30 [Apk] typ	30 [Apk] typ	30 [Apk] typ	30 [Apk] typ
	STANDBY POWER	DC 150 [V]	0.3W(DOE VI)					
	LEAKAGE CURRENT	DC 150 [V]	MAX 0.5mA					
OUTPUT	VOLTAGE		12 [V]	24 [V]	48 [V]	12 [V]	24 [V]	48 [V]
	CURRENT		10.0 [A]	5.0 [A]	2.5 [A]	12.5 [A]	6.3 [A]	3.2 [A]
	LINE REGULATION		120 [mV] max	120 [mV] max	240 [mV] max	120 [mV] max	120 [mV] max	240 [mV] max
	LOAD REGULATION		240 [mV] max	240 [mV] max	720 [mV] max	240 [mV] max	240 [mV] max	720 [mV] max
	RIPPLE & NOISE		120 [mVp-p]	150 [mVp-p]	100 [mVp-p]	120 [mVp-p]	150 [mVp-p]	180 [mVp-p]
	TEMPERATURE DRIFT (0~50°C)		240[mV] max					
	START-UP TIME	DC 150 [V]	3 [s] at Full Load					
	HOLD-UP	DC 150 [V]	15 [ms] at Full Load					
PROTECTION CIRCUIT	OVER CURRENT PROTECTION		Works over 140% of rating and recovers automatically (hiccup)					
	OVER VOLTAGE PROTECTION		15 ~ 22 [V]	27 ~ 35 [V]	50 ~ 70 [V]	15 ~ 22 [V]	27 ~ 35 [V]	50 ~ 70 [V]
			Re power on to recover (shut down)					
	OVER RATED INDICATION		Works over 105% of rating and recovers automatically (Red LED)					
WITHSTAND VOLTAGE	INPUT-OUTPUT		AC 3,000V 1minute, Cutoff current = 20mA					
	INPUT-CASE, FG		AC 2,000V 1minute, Cutoff current = 20mA					
	OUTPUT-CASE, FG		AC 500V 1minute, Cutoff current = 30mA					
ISOLATION RESISTANCE	INPUT-OUTPUT		DC 500V 50MΩ					
	INPUT-CASE, FG		DC 500V, 50MΩ					
	OUTPUT-CASE, FG		DC 100V 10MΩ					
ENVIRONMENT	OPERATING TEMP AND HUMID		-10 ~ 50°C, 20 ~ 90% rh (non condensing)					
	STORAGE TEMP AND HUMID		-20 ~ 70°C (non condensing)					
GENERAL	COOLING		Air					
	WEIGHT		1.0 [kg]					

DIN-RAIL **DD TYPE** Series 120, 150W

CE RoHS

Front part name

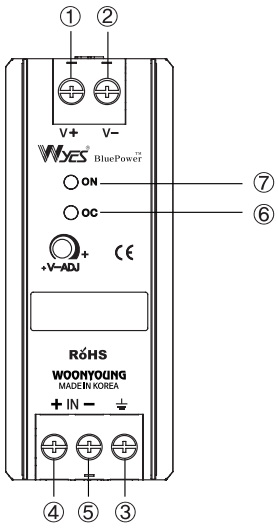

① + Output Terminal
② − Output Terminal
③ Frame Ground
④ DC Input (+)
⑤ DC Input (−)
⑥ Over Current LED (Red)
⑦ Output LED (Green)

Derating Curve For Ambient

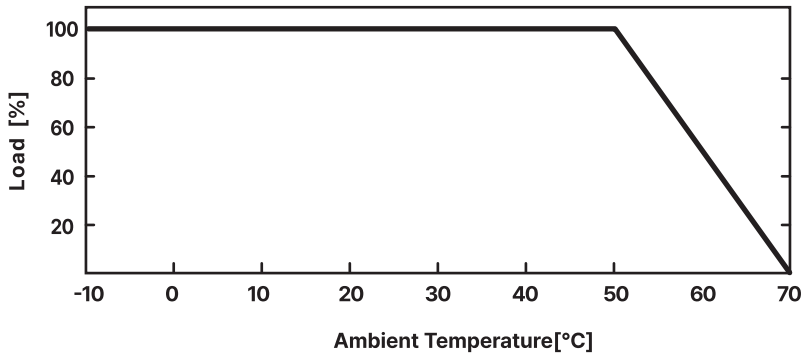

Derating Curve For Input Voltage

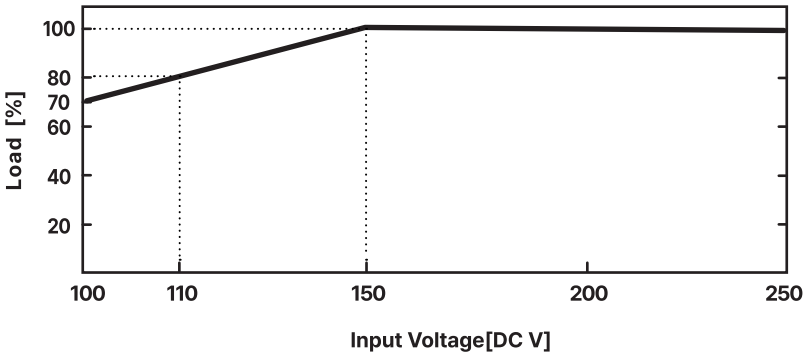

Dimension

DIN-Rail Mount

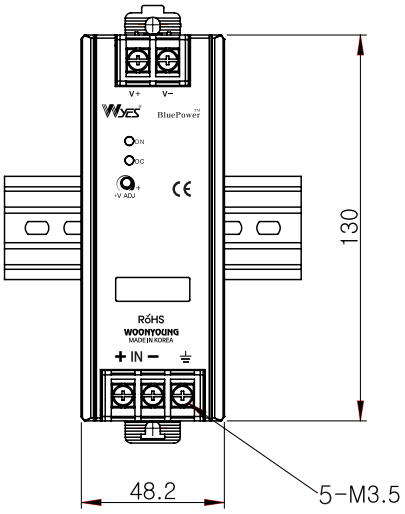

Wall Mount

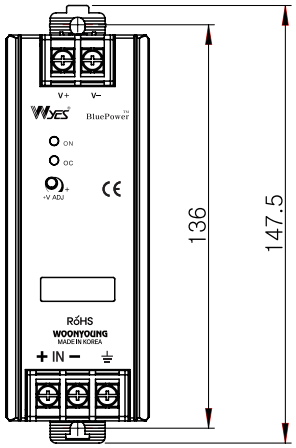

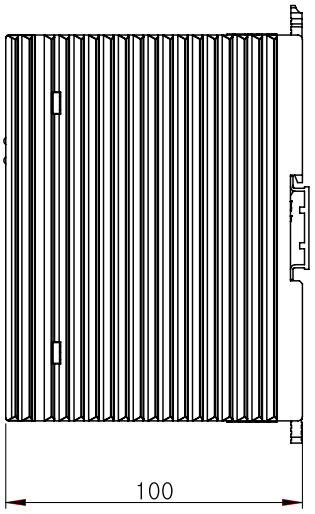

Terminal

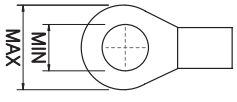

Max 6 , Min 3.5

DIN-RAIL DD TYPE Series 200, 250W

CE RoHS



Features

- Wide Input Voltage Range(DC 100 ~ 250V)
- Short Circuit Protection
- High Efficiency up to 91%
- Auto-Restart Mode
- Built-in Inrush Current Limiter
- LED Indicator for Power On & Over Load
- Over Current Protection

DIN Rail 및 벽부 취부형 구조로 현장 작업시 간편하며 대량 설치시 면적을 최소로 줄일수 있는 Unit형 SMPS 입니다.

This is a unitized SMPS that is convenient to work on at sites and can reduce areas during large-scale installation as a DIN rail and wall attached structure.

Specifications

ITEM \ MODEL			WYSP-200S12DD	WYSP-200S24DD	WYSP-200S48DD	WYSP-250S12DD	WYSP-250S24DD	WYSP-250S48DD
SAFETY STANDARDS			CE IEC 62368-1:2018	CE IEC 62368-1:2018	CE IEC 62368-1:2018	CE IEC 62368-1:2018	CE IEC 62368-1:2018	CE IEC 62368-1:2018
INPUT	DC Input Volatage Nominal		DC 110 ~ 230 [V]					
	DC Input Volatage Range		DC 100 ~ 250 [V]					
	CURRENT	DC 150 [V]	1.5 [A]			1.9 [A]		
	EFFICIENCY	DC 150 [V]	91 [%]	92 [%]	92 [%]	91 [%]	92 [%]	92 [%]
	INRUSH CURRENT	DC 150 [V]	30 [Apk] typ	30 [Apk] typ	30 [Apk] typ	30 [Apk] typ	30 [Apk] typ	30 [Apk] typ
	STANDBY POWER	DC 150 [V]	0.21W(DOE VI)					
	LEAKAGE CURRENT	DC 150 [V]	MAX 0.5mA					
OUTPUT	VOLTAGE		12 [V]	24 [V]	48 [V]	12 [V]	24 [V]	48 [V]
	CURRENT		16.7 [A]	8.4 [A]	4.2 [A]	20.9 [A]	10.5 [A]	5.2 [A]
	LINE REGULATION		60 [mV] max	120 [mV] max	240 [mV] max	60 [mV] max	120 [mV] max	240 [mV] max
	LOAD REGULATION		240 [mV] max	480 [mV] max	720 [mV] max	240 [mV] max	480 [mV] max	720 [mV] max
	RIPPLE & NOISE		120 [mVp-p]	150 [mVp-p]	100 [mVp-p]	120 [mVp-p]	150 [mVp-p]	180 [mVp-p]
	TEMPERATURE DRIFT (0~50°C)		240[mV] max					
	START-UP TIME	DC 150 [V]	2 [s] at Full Load					
	HOLD-UP TIME	DC 150 [V]	12 [ms] at Full Load					
PROTECTION CIRCUIT	OVER CURRENT PROTECTION		Works over 140% of rating and recovers automatically (hiccup)					
	OVER VOLTAGE PROTECTION		15 ~ 22 [V]	27 ~ 35 [V]	50 ~ 70 [V]	15 ~ 22 [V]	27 ~ 35 [V]	50 ~ 70 [V]
			Re power on to recover (shut down)					
	OVER RATED INDICATION		Works over 105% of rating and recovers automatically(Red LED)					
WITHSTAND VOLTAGE	INPUT-OUTPUT		AC 3,000V 1minute, Cutoff current = 20mA					
	INPUT-CASE, FG		AC 2,000V 1minute, Cutoff current = 20mA					
	OUTPUT-CASE, FG		AC 500V 1minute, Cutoff current = 30mA					
ISOLATION RESISTANCE	INPUT-OUTPUT		DC 500V 50MΩ					
	INPUT-CASE, FG		DC 500V, 50MΩ					
	OUTPUT-CASE, FG		DC 100V 10MΩ					
ENVIRONMENT	OPERATING TEMP AND HUMID		-10 ~ 50°C, 20 ~ 90% rh (non condensing)					
	STORAGE TEMP AND HUMID		-20 ~ 70°C (non condensing)					
GENERAL	COOLING		Air					
	WEIGHT		1.0 [kg]					

DIN-RAIL **DD TYPE Series** 300W

CE RoHS



Features

- Wide Input Voltage Range(DC 100 ~ 250V)
- Short Circuit Protection
- High Efficiency up to 91%
- Auto-Restart Mode
- Built-in Inrush Current Limiter
- LED Indicator for Power On & Over Load
- Over Current Protection

DIN Rail 및 벽부 취부형 구조로 현장 작업시 간편하며 대량 설치시 면적을 최소로 줄일수 있는 Unit형 SMPS 입니다.

This is a unitized SMPS that is convenient to work on at sites and can reduce areas during large-scale installation as a DIN rail and wall attached structure.

Specifications

ITEM \ MODEL			WYSP-300S12DD	WYSP-300S24DD	WYSP-300S48DD
SAFETY STANDARDS			CE IEC 62368-1:2018	CE IEC 62368-1:2018	CE IEC 62368-1:2018
INPUT	DC Input Volatage Nominal		DC 110 ~ 230 [V]		
	DC Input Volatage Range		DC 100 ~ 250 [V]		
	CURRENT	DC 150 [V]	2.3 [A]		
	EFFICIENCY	DC 150 [V]	91 [%]	92 [%]	92 [%]
	INRUSH CURRENT	DC 150 [V]	30 [Apk] typ	30 [Apk] typ	30 [Apk] typ
	STANDBY POWER	DC 150 [V]	0.21W(DOE VI)		
	LEAKAGE CURRENT	DC 150 [V]	MAX 0.5mA		
OUTPUT	VOLTAGE		12 [V]	24 [V]	48 [V]
	CURRENT		25.0 [A]	12.5 [A]	6.3 [A]
	LINE REGULATION		60 [mV] max	120 [mV] max	240 [mV] max
	LOAD REGULATION		240 [mV] max	480 [mV] max	720 [mV] max
	RIPPLE & NOISE		120 [mVp-p]	150 [mVp-p]	180 [mVp-p]
	TEMPERATURE DRIFT (0~50°C)		240[mV] max		
	START-UP TIME	DC 150 [V]	2 [s] at Full Load		
	HOLD-UP TIME	DC 150 [V]	12 [ms] at Full Load		
PROTECTION CIRCUIT	OVER CURRENT PROTECTION		Works over 140% of rating and recovers automatically (hiccup)		
	OVER VOLTAGE PROTECTION		15 ~ 22 [V]	27 ~ 35 [V]	50 ~ 70 [V]
			Re power on to recover (shut down)		
	OVER RATED INDICATION		Works over 105% of rating and recovers automatically(Red LED)		
WITHSTAND VOLTAGE	INPUT-OUTPUT		AC 3,000V 1minute, Cutoff current = 20mA		
	INPUT-CASE, FG		AC 2,000V 1minute, Cutoff current = 20mA		
	OUTPUT-CASE, FG		AC 500V 1minute, Cutoff current = 30mA		
ISOLATION RESISTANCE	INPUT-OUTPUT		DC 500V 50MΩ		
	INPUT-CASE, FG		DC 500V, 50MΩ		
	OUTPUT-CASE, FG		DC 100V 10MΩ		
ENVIRONMENT	OPERATING TEMP AND HUMID		-10 ~ 50°C, 20 ~ 90% rh (non condensing)		
	STORAGE TEMP AND HUMID		-20 ~ 70°C (non condensing)		
GENERAL	COOLING		Air		
	WEIGHT		1 [kg]		

DIN-RAIL **DD TYPE** Series 200, 250, 300W

CE RoHS

● 전면 부 명칭

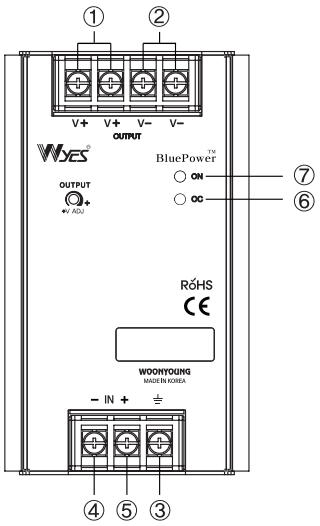

① + Output Terminal
② − Output Terminal
③ Frame Ground
④ DC Input (+)
⑤ DC Input (−)
⑥ Over Current LED (Red)
⑦ Output LED (Green)

● Derating Curve For Ambient

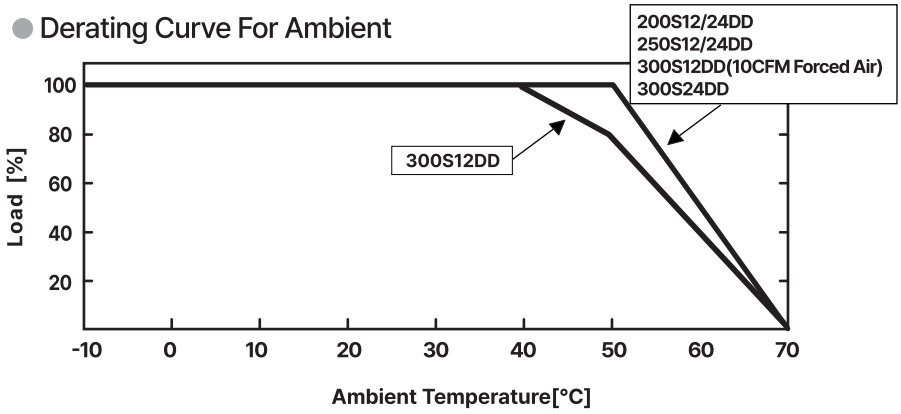

● Derating Curve For Input Voltage

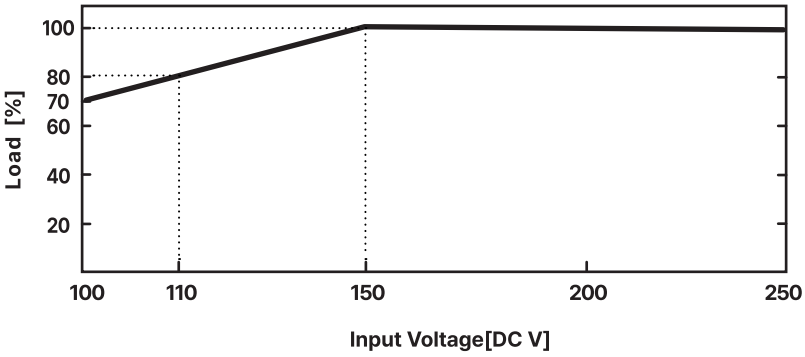

● Dimension

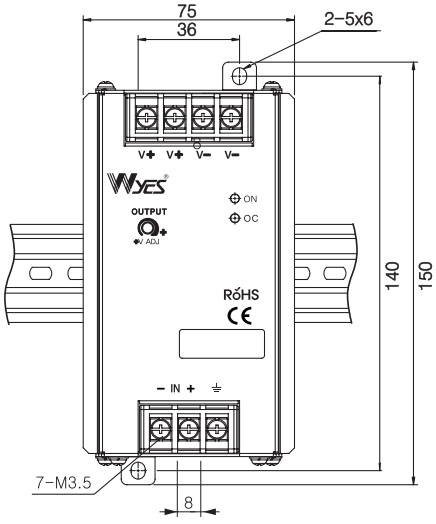

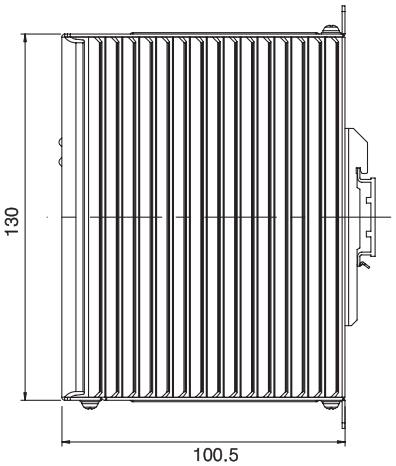

● Option (WYSP−300S12DD)

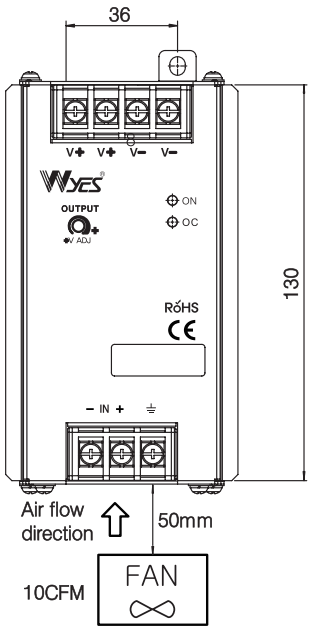

● Terminal

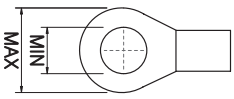

Max 7 , Min 3.5

DIN-RAIL **DD TYPE** Series 400, 500W

CE RoHS



Features

- Wide Input Voltage Range(DC 100 ~250V)
- Built－in Inrush Current Limitter
- Over Current Protection
- Short Circuit Protection
- LED Indicator for Power On & Over Load
- Auto－Restart Mode
- High Efficiency up to 91%

본 대용량 제품은 DIN Rail 및 벽부 취부형 구조로 각종 분진이 존재하는 산업현장에 최적화된 Fanless 설계에 따라 효율이 높은 공진형 회로방식과 동기정류회로가 채택된 제품입니다.

This large-capacity product is a product adopting a resonance converter and a synchronous rectification circuit with high efficiency according to a fan-less design optimized to industrial sites with various dusts as a DIN rail and wall attached structure.

Specifications

ITEM \ MODEL			WYSP－400S24DD	WYSP－400S48DD	WYSP－500S24DD	WYSP-500S48DD
SAFETY STANDARDS			CE IEC 62368－1:2018	CE IEC 62368－1:2018	CE IEC 62368－1:2018	CE IEC 62368－1:2018
INPUT	DC Input Volatage Nominal		DC 110 ～ 230 [V]			
	DC Input Volatage Range		DC 100 ～ 250 [V]			
	CURRENT	DC 150 [V]	3.0 [A]		3.8 [A]	
	EFFICIENCY	DC 150 [V]	92 [%]	92 [%]	92 [%]	92 [%]
	INRUSH CURRENT	DC 150 [V]	30 [Apk] typ	30 [Apk] typ	30 [Apk] typ	30 [Apk] typ
	STANDBY POWER	DC 150 [V]	0.3W(DOE VI)			
	LEAKAGE CURRENT	DC 150 [V]	MAX 0.5mA			
OUTPUT	VOLTAGE		24 [V]	48 [V]	24 [V]	48 [V]
	CURRENT		16.7 [A]	8.4 [A]	20.9 [A]	10.5 [A]
	LINE REGULATION		120 [mV] max	240 [mV] max	120 [mV] max	240 [mV] max
	LOAD REGULATION		480 [mV] max	720 [mV] max	480 [mV] max	720 [mV] max
	RIPPLE & NOISE		240 [mVp－p]	100 [mVp－p]	240 [mVp－p]	180 [mVp－p]
	TEMPERATURE DRIFT (0～50°C)		240[mV] max			
	START-UP TIME	DC 150 [V]	1 [s] at Full Load			
	HOLD-UP TIME	DC 150 [V]	16 [ms] at Full Load			
PROTECTION CIRCUIT	OVER CURRENT PROTECTION		Works over 140% of rating and recovers automatically (hiccup)			
	OVER VOLTAGE PROTECTION		27 ～ 35 [V]	50 ～ 70 [V]	27 ～ 35 [V]	50 ～ 70 [V]
			Re power on to recover (shut down)			
	OVER RATED INDICATION		Works over 105% of rating and recovers automatically(Red LED)			
WITHSTAND VOLTAGE	INPUT－OUTPUT		AC3,000V 1minute, Cutoff current = 20mA			
	INPUT－CASE, FG		AC2,000V 1minute, Cutoff current = 20mA			
	OUTPUT－CASE, FG		AC500V 1minute, Cutoff current = 30mA			
ISOLATION RESISTANCE	INPUT－OUTPUT		DC500V 50MΩ			
	INPUT－CASE, FG		DC500V, 50MΩ			
	OUTPUT－CASE, FG		DC100V 10MΩ			
ENVIRONMENT	OPERATING TEMP AND HUMID		－10 ～ 50°C, 20 ～ 90% rh (non condensing)			
	STORAGE TEMP AND HUMID		－20 ～ 70°C (non condensing)			
GENERAL	COOLING		Air			
	WEIGHT		1.3 [kg]			

DIN-RAIL **DD TYPE** Series 400, 500W

CE RoHS

● 전면 부 명칭

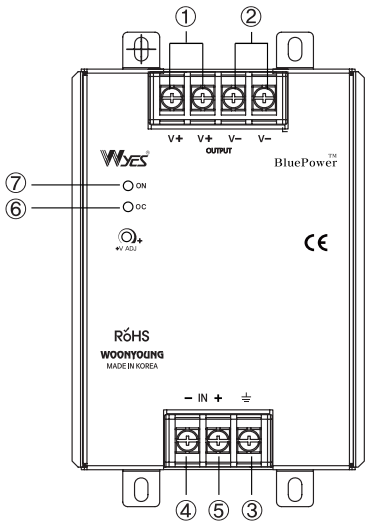

① + Output Terminal
② − Output Terminal
③ Frame Ground
④ DC Input (+)
⑤ DC Input (−)
⑥ Over Current LED (Red)
⑦ Output LED (Green)

● Derating Curve For Ambient

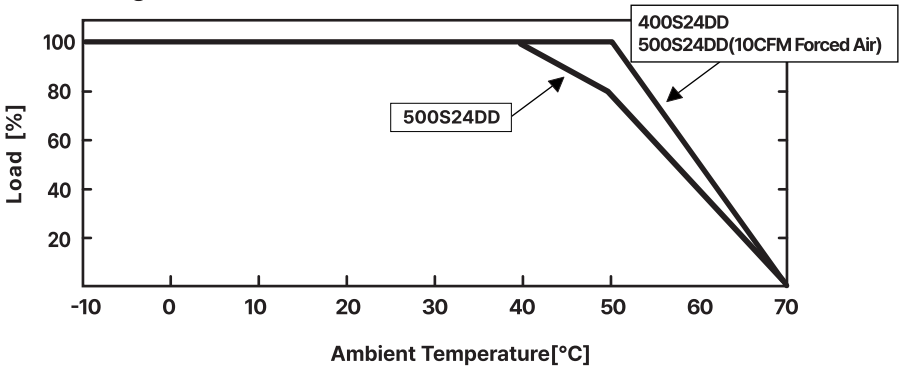

● Derating Curve For Input Voltage

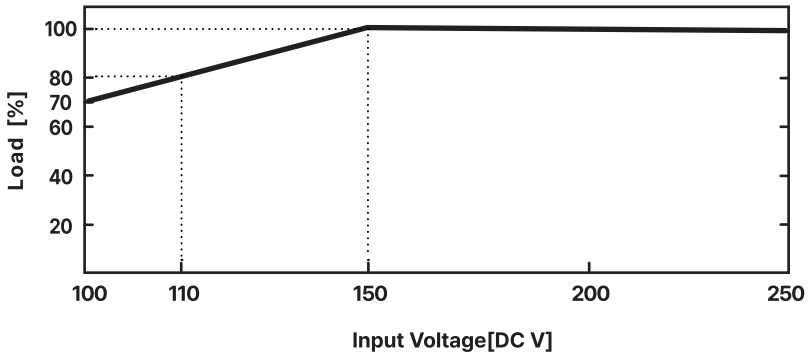

● Dimension

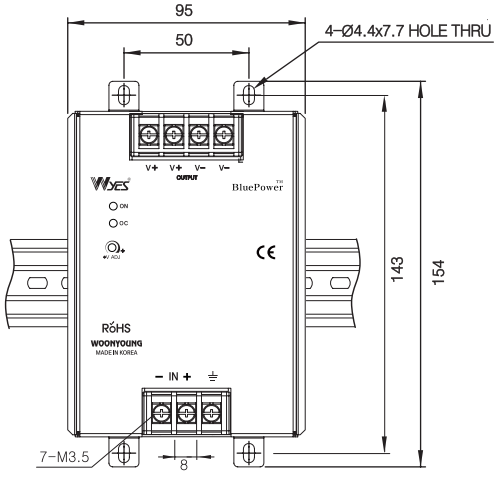

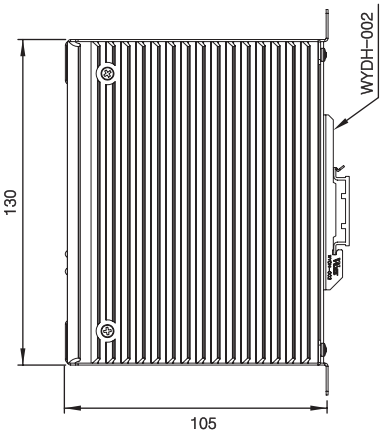

● Option (WYSP−500S24DD)

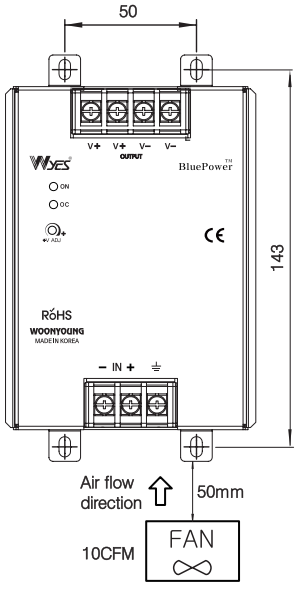

● Terminal

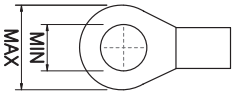

Max 7 , Min 3.5

DIN-RAIL **DB TYPE** Series 10, 20W

CE RoHS





Features

- Input Voltage Range (AC90－264V)
- Over Current Protection
- Over Temperature Protection
- Built－in Inrush Current Limitter
- Short Circuit Protection
- Auto－Restart Mode

DIN Rail 취부 구조로 현장 설치시 작업공간이 용이하고 2차측 접지(FG) 단자가 있는 Unit형 SMPS 입니다.

This is a unitized SMPS with a secondary grounding(FG) terminal that allows an enough work space during installation at sites as a DIN Rail attached structure.

Specifications

ITEM \ MODEL		WYSP－10S05DB	WYSP－10S12DB	WYSP－10S24DB	WYSP－20S12DB	WYSP－20S24DB
Input	Voltage	110VAC...0.4A/220VAC.....0.2A(Full Load) FREE VOLTAGE				
	Frequency	50/60Hz(47 ～ 440HzorDC)				
	Efficlency	70% typ	75% typ	78% typ	75% typ	78% typ
	Inrushcurrent	110VAC....14A/220VAC....28A(Io=100%,Ta=25°C at cold start)				
Output	Voltage (V)	5	12	24	12	24
	Current (A)	2.0	0.84	0.42	1.67	0.84
	Regulation Line (mV)	25Max	50Max	75Max	50Max	75Max
	Regulation Load (mV)	50Max	100Max	150Max	100Max	150Max
	Ripple (mVp－p)	50Max	100Max	150Max	100Max	150Max
	Ripple Noise (mVp－p)	100Max	170Max	200Max	170Max	200Max
	Temperature Drift 0～50°C (mV)	50Max	100Max	150Max	100Max	150Max
	Rise Time (mS)	100 Max (AC IN 85V Io = 100%)				
	Holding Time (mS)	15 typ (AC IN 85V Io = 100%)				
Protectioncircuit	Over Current Protection	Works at over 110% of rating and recovers automatically				
	Over Voltage Protection	–				
Electrically Isolated	Input－Output	AC 1,500V 1minute, DC 500V 100MΩ(At room temperature & Humidity)				
	Input-Case and FG	AC 1,500V 1minute, DC 500V 100MΩ(At room temperature & Humidity)				
	Output－Case	AC 500V 1minute, DC 500V 100MΩ(At room temperature & Humidity)				
Environment	Operationtemp. and Humid	0 ～ +50°C, 20 ～ 90% RH (Non Condensing)				
	Storagetemp. and Humid	−20 ～ +75°C, 20 ～ 90% RH (Non Condensing)				
General	Cooling	Natural cooling				
	Function	–				
	Weight (kg)	0.2				

Derating Curve For Ambient

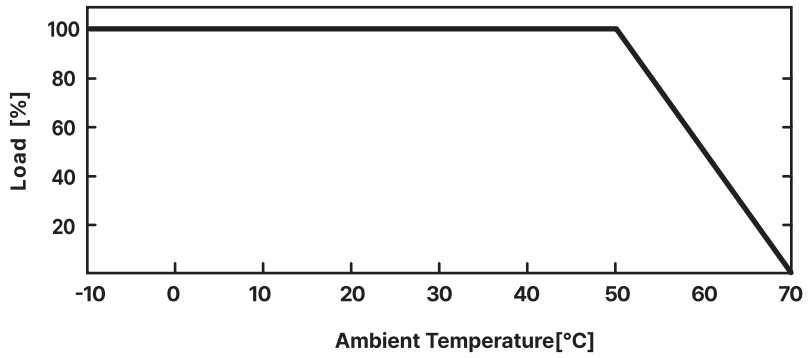

Derating Curve For Input Voltage

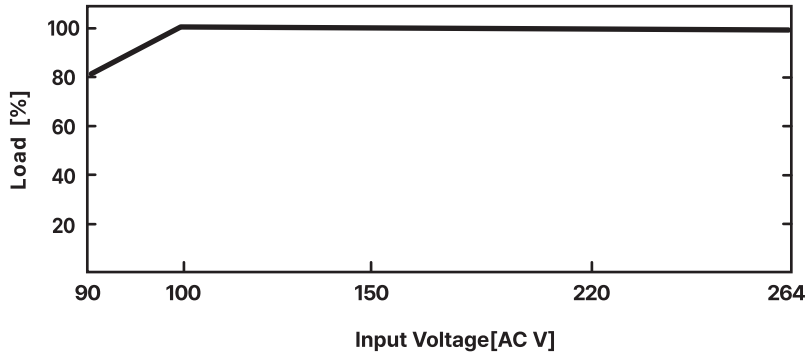

Dimension

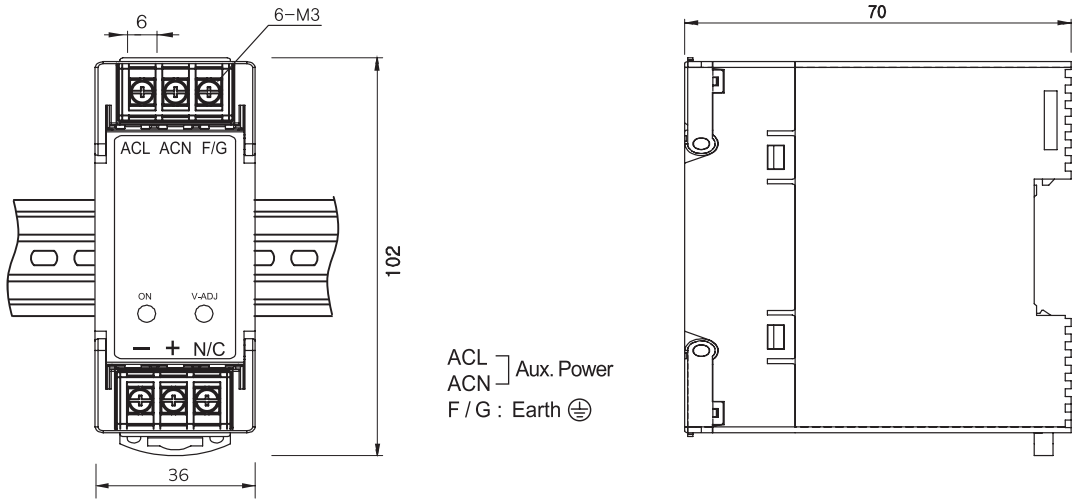

Terminal

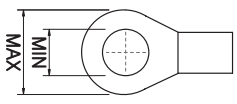

Max 5 , Min 3

DIN-RAIL **DB TYPE** Series 30, 50W

CE RoHS



Features

- Input Voltage Range (AC90－264V)
- Built－in Inrush Current Limitter
- Over Current Protection
- Short Circuit Protection
- Over Temperature Protection
- Auto－Restart Mode

DIN Rail 및 벽부 취부 겸용 구조로 현장 설치시 작업공간이 용이하고 2차측 접지(FG) 단자가 있는 Unit형 SMPS 입니다.

This is a unitized SMPS with a secondary grounding(FG) terminal that allows an enough work space during installation at sites as a DIN rail and wall attached structure.

Specifications

ITEM \ MODEL		WYSP－30S05DB	WYSP－30S12DB	WYSP－30S24DB	WYSP－50S12DB	WYSP－50S24DB
Input	Voltage	110VAC...0.4A/220VAC.....0.2A(Full Load) FREE VOLTAGE				
	Frequency	50/60Hz(47 ～ 440HzorDC)				
	Efficlency	70% typ	75% typ	78% typ	75% typ	78% typ
	Inrushcurrent	110VAC....14A/220VAC....28A(Io=100%,Ta=25°C at cold start)				
Output	Voltage (V)	5	12	24	12	24
	Current (A)	6.0	2.5	1.25	4.2	2.1
	Regulation Line (mV)	25Max	50Max	75Max	50Max	75Max
	Regulation Load (mV)	50Max	100Max	150Max	100Max	150Max
	Ripple (mVp－p)	50Max	100Max	150Max	100Max	150Max
	Ripple Noise (mVp－p)	100Max	170Max	200Max	170Max	200Max
	Temperature Drift 0~50°C (mV)	50Max	100Max	150Max	100Max	150Max
	Rise Time (mS)	100 Max (AC IN 85V Io = 100%)				
	Holding Time (mS)	15 typ (AC IN 85V Io = 100%)				
Protectioncircuit	Over Current Protection	Works at over 110% of rating and recovers automatically				
	Over Voltage Protection	–				
Electrically Isolated	Input－Output	AC 1,500V 1minute, DC 500V 100MΩ(At room temperature & Humidity)				
	Input－Case and FG	AC 1,500V 1minute, DC 500V 100MΩ(At room temperature & Humidity)				
	Output－Case	AC 500V 1minute, DC 500V 100MΩ(At room temperature & Humidity)				
Environment	Operationtemp. and Humid	0 ～ +50°C, 20 ～ 90% RH (Non Condensing)				
	Storagetemp. and Humid	−20 ～ +75°C, 20 ～ 90% RH (Non Condensing)				
General	Cooling	Natural cooling				
	Function	–				
	Weight (kg)	0.2				

Derating Curve For Ambient

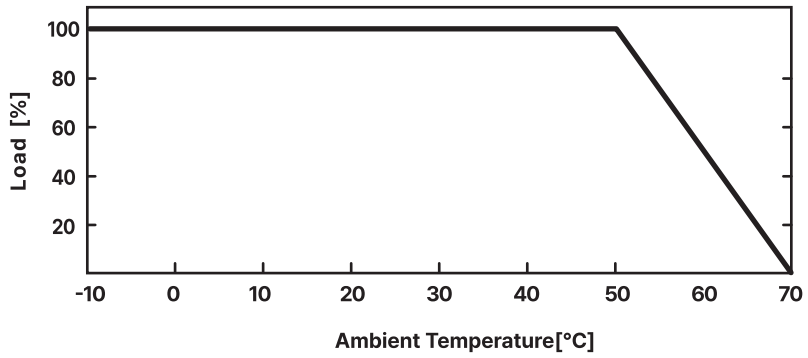

Derating Curve For Input Voltage

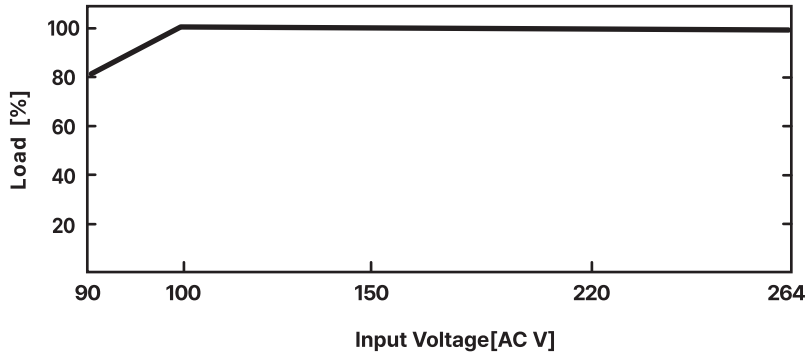

Dimension

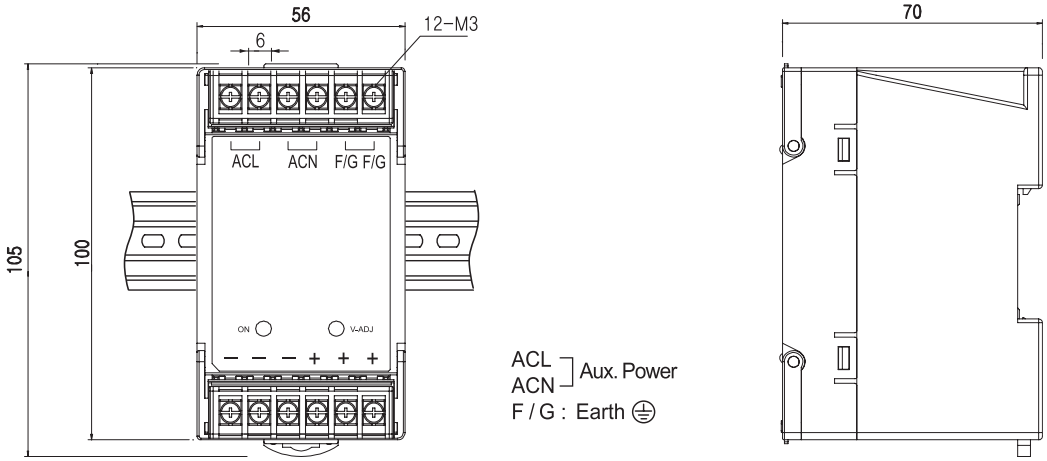

Terminal

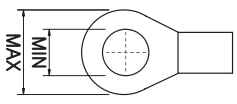

Max 5 , Min 3

DIN-RAIL **DB TYPE** Series 75, 100, 120, 150W

CE RoHS



Features

- Input Voltage Range (AC90－264V)
- Built－in Inrush Current Limitter
- Over Current Protection
- Short Circuit Protection
- Over Temperature Protection
- Auto－Restart Mode

● 입출력 단자 구조가 한방향으로 배열되어 있어 배선작업 등이 간편합니다.

● The input/output terminal structure is arrayed in a direction to facilitate wiring work.

Specifications

ITEM \ MODEL		WYSP－75S24DB	WYSP－100S24DB	WYSP－120S24DB	WYSP－150S24DB
INPUT	VOLTAGE	FREE VOLTAGE(100～240V)	110VAC...0.4A/220VAC.....0.2A(FullLoad)		
	FREQUENCY	50/60Hz (47 ～ 440Hz or DC)			
	EFFICIENCY	75% typ	78% typ	75% typ	78% typ
	INRUSHCURRENT	110VAC....14A/220VAC....28A(Io=100%, Ta=25°C at cold start)			
OUTPUT CIRCUIT	VOLTAGE (V)	24			
	CURRENT (A)	3.2	4.2	5.0	6.3
	REGULATION LINE (mV)	120Max			
	REGULATION LOAD (mV)	240Max			
	RIPPLE (mVp－p)	240Max			
	RIPPLE NOISE (mVp－p)	290Max			
	TEMPERATURE DRIFT 0 ～ 50°C (mV)	240Max			
	RISE TIME (mS)	100 Max (AC IN 85V Io = 100%)			
	HOLDING TIME (mS)	15 typ (AC IN 85V Io = 100%)			
PROTECTION CIRCUIT	OVER CURRENT PROTECTION	Works at over 110% of rating and recovers automatically			
	OVER VOLTAGE PROTECTION	–			
ELECTRICALLY ISOLATED	INPUT－OUTPUT	AC 1,500V 1minute, DC 500V 100MΩ (At room temperature & Humidity)			
	INPUT－CASE.FG	AC 1,500V 1minute, DC 500V 100MΩ (At room temperature & Humidity)			
	OUTPUT－CASE	AC 500V 1minute, DC 500V 100MΩ (At room temperature & Humidity)			
ENVIRONMENT	OPERATING TEMP.AND HUMID	0 ～ +50°C, 20 ～ 90% RH (Non Condensing)			
	STORAGE TEMP. AND HUMID	−20 ～ +75°C, 20 ～ 90% RH (Non Condensing)			
GENERAL	COOLING	Convection cooling			
	FUNCTION	–			
	WEIGHT (kg)	0.6			

Derating Curve For Ambient

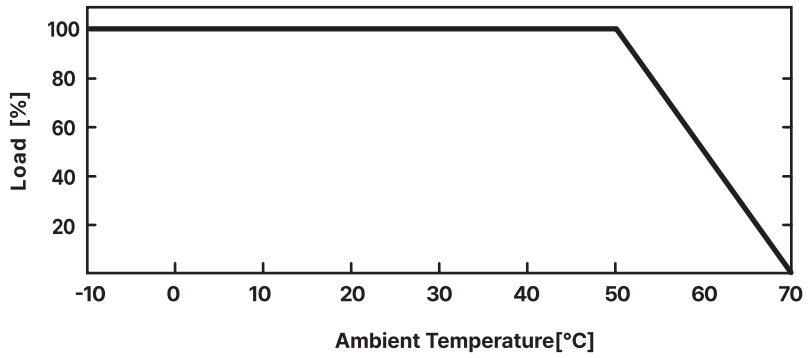

Derating Curve For Input Voltage

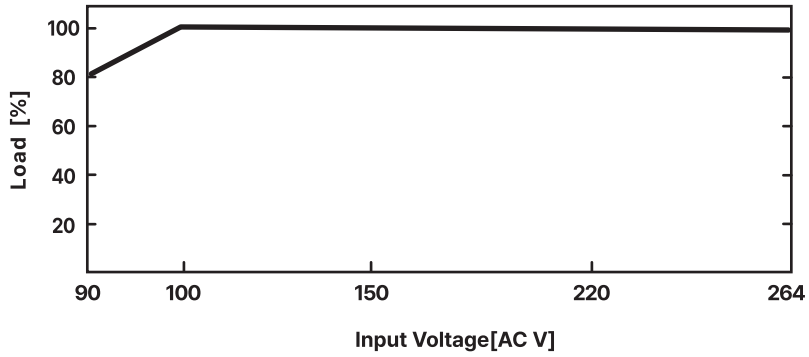

Dimension

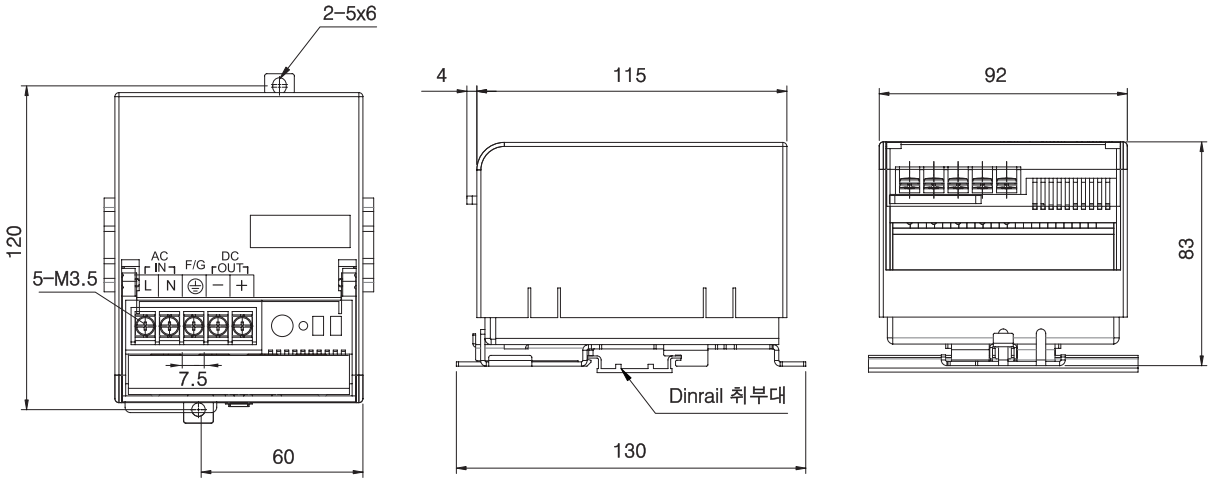

Terminal

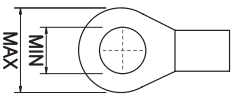

Max 7 , Min 3.5

스위칭 전원장치
Switching Mode Power Supply(SMPS)

DIN & 단자대형(Terminal Type)

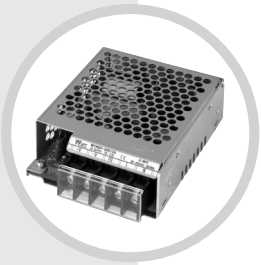

DIN & NSP Series
•10W~300W

DIN & NSP-PFC Series
•75W~300W



PCB Open Board Type
•15W~30W

SP Series

Single Output Type(1CH)
• 15W~1500W



Dual Output Type(2CH)
• 15W~75W

Triple Output Type(3CH)
• 15W~50W



NSP Series 10W

CE RoHS





Features

- Input Voltage Range (AC90 ~ 264V)
- Built－in Inrush Current Limitter
- Over Current Protection
- Short Circuit Protection
- Over Temperature Protection
- Auto－Restart Mode
- Small Size
- Option(Din－Rail Bracket Page 16)

Specifications

ITEM \ MODEL		WYNSP－10S05A	WYNSP－10S12A	WYNSP－10S24A	WYNSP－10S48A
INPUT	VOLTAGE	110VAC...0.4A/220VAC.....0.2A(Full Load) FREE VOLTAGE			
	FREQUENCY	50/60Hz (47 ~ 440Hz or DC)			
	EFFICIENCY	70% typ	75% typ	78% typ	78% typ
	INRUSHCURRENT	110VAC...4.5A/220VAC....9A(Io=100%, Ta=25°C at cold start)			
OUTPUT CIRCUIT	VOLTAGE (V)	5	12	24	48
	CURRENT (A)	2.0	0.84	0.42	0.21
	REGULATION LINE (mV)	25Max	60Max	120Max	240Max
	REGULATION LOAD (mV)	50Max	120Max	240Max	480Max
	RIPPLE (mVp－p)	50Max	120Max	240Max	480Max
	RIPPLE NOISE (mVp－p)	100Max	170Max	290Max	530Max
	TEMPERATURE DRIFT (mV) 0 ~ 50°C	50Max	120Max	240Max	480Max
	RISE TIME (mS)	100 Max (AC IN 85V Io = 100%)			
	HOLDING TIME (mS)	15 typ (AC IN 85V Io = 100%)			
PROTECTION CIRCUIT	OVER CURRENT PROTECTION	Works at over 110% of rating and recovers automatically			
	OVER VOLTAGE PROTECTION	–			
ELECTRICALLY ISOLATED	INPUT－OUTPUT	AC 1,500V 1minute, DC 500V 100MΩ (At room temperature & Humidity)			
	INPUT－CASE.FG	AC 1,500V 1minute, DC 500V 100MΩ (At room temperature & Humidity)			
	OUTPUT－CASE	AC 500V 1minute, DC 500V 100MΩ (At room temperature & Humidity)			
ENVIRONMENT	OPERATING TEMP.AND HUMID	0 ~ +50°C, 20 ~ 90% RH (Non Condensing)			
	STORAGE TEMP. AND HUMID	−20 ~ +75°C, 20 ~ 90% RH (Non Condensing)			
GENERAL	COOLING	Natural cooling			
	WEIGHT (kg)	0.2			

Derating Curve For Ambient

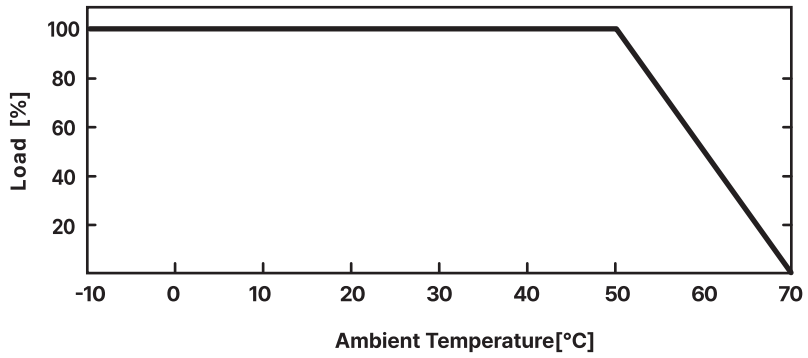

Derating Curve For Input Voltage

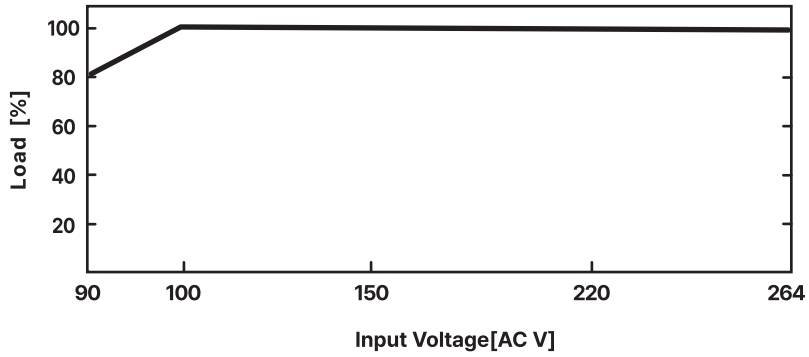

Dimension

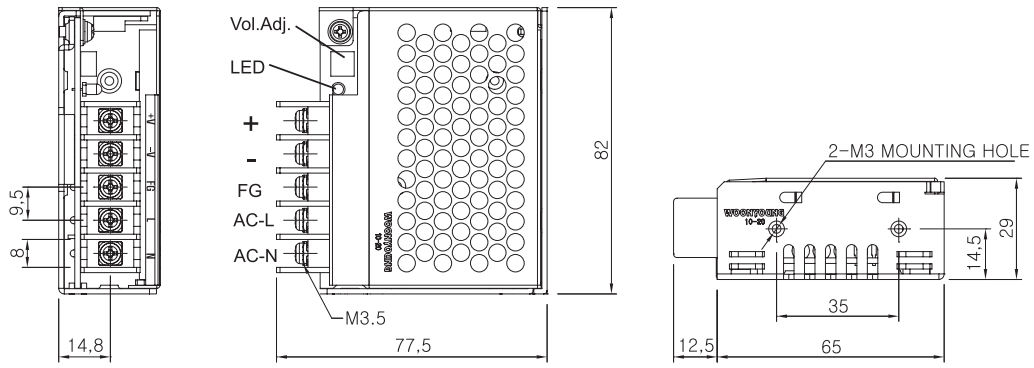

Terminal

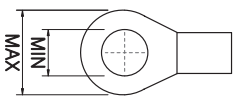

Max 7 , Min 3.5

NSP Series 20W

CE RoHS





Features

- Input Voltage Range (AC90 ~ 264V)
- Built-in Inrush Current Limitter
- Over Current Protection
- Short Circuit Protection
- Over Temperature Protection
- Auto-Restart Mode
- Small Size
- Option(Din-Rail Bracket Page 16)

Specifications

ITEM \ MODEL		WYNSP-20S05A	WYNSP-20S12A	WYNSP-20S24A	WYNSP-20S48A
INPUT	VOLTAGE	110VAC...0.4A/220VAC.....0.2A(Full Load) FREE VOLTAGE			
	FREQUENCY	50/60Hz (47 ~ 440Hz or DC)			
	EFFICIENCY	70% typ	75% typ	78% typ	78% typ
	INRUSHCURRENT	110VAC...4.5A/220VAC....9A(Io=100%, Ta=25°C at cold start)			
OUTPUT CIRCUIT	VOLTAGE (V)	5	12	24	48
	CURRENT (A)	4.0	1.67	0.84	0.42
	REGULATION LINE (mV)	50Max	120Max	240Max	480Max
	REGULATION LOAD (mV)	100Max	170Max	290Max	530Max
	RIPPLE (mVp-p)	50Max	120Max	240Max	480Max
	RIPPLE NOISE (mVp-p)	100Max	170Max	290Max	530Max
	TEMPERATURE DRIFT (mV) 0 ~ 50°C	50Max	120Max	240Max	480Max
	RISE TIME (mS)	100 Max (AC IN 85V Io = 100%)			
	HOLDING TIME (mS)	15 typ (AC IN 85V Io = 100%)			
PROTECTION CIRCUIT	OVER CURRENT PROTECTION	Works at over 110% of rating and recovers automatically			
	OVER VOLTAGE PROTECTION	–			
ELECTRICALLY ISOLATED	INPUT-OUTPUT	AC 1,500V 1minute, DC 500V 100MΩ (At room temperature & Humidity)			
	INPUT-CASE.FG	AC 1,500V 1minute, DC 500V 100MΩ (At room temperature & Humidity)			
	OUTPUT-CASE	AC 500V 1minute, DC 500V 100MΩ (At room temperature & Humidity)			
ENVIRONMENT	OPERATING TEMP.AND HUMID	0 ~ +50°C, 20 ~ 90% RH (Non Condensing)			
	STORAGE TEMP. AND HUMID	-20 ~ +75°C, 20 ~ 90% RH (Non Condensing)			
GENERAL	COOLING	Natural cooling			
	WEIGHT (kg)	0.2			

Derating Curve For Ambient

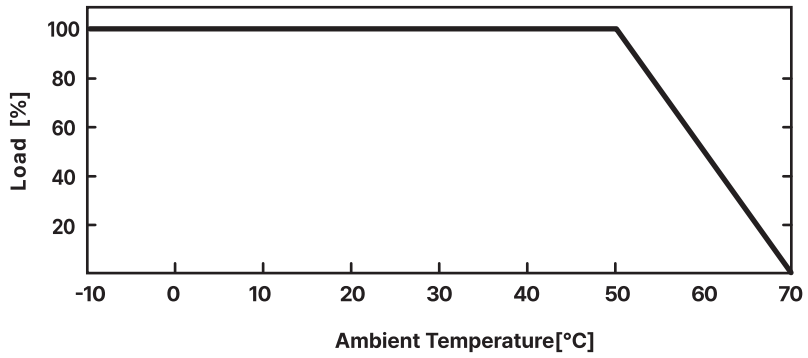

Derating Curve For Input Voltage

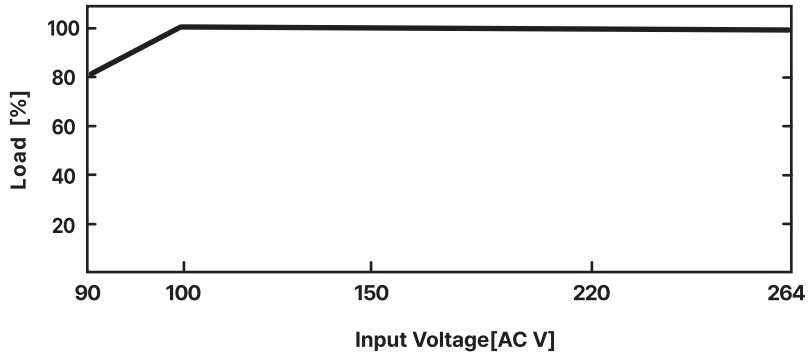

Dimension

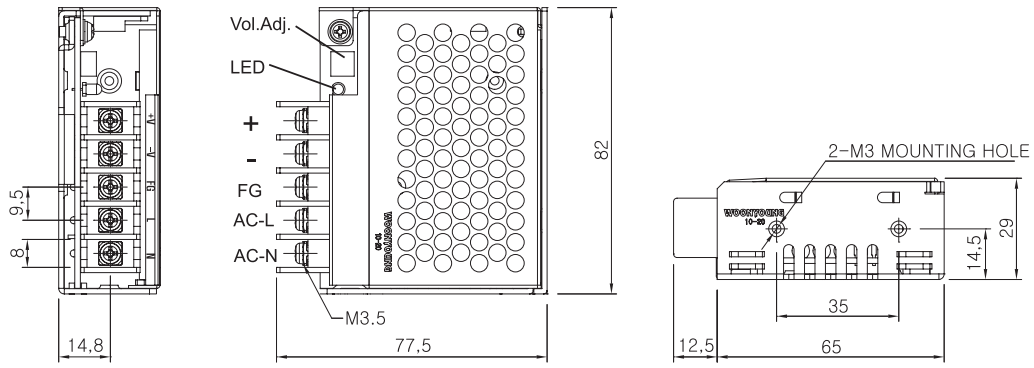

Terminal

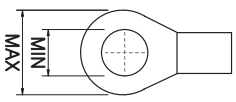

Max 7 , Min 3.5

NSP Series 30W



Features

- Input Voltage Range (AC90~264V)
- Built-in Inrush Current Limitter
- Over Current Protection
- Short Circuit Protection
- Over Temperature Protection
- Auto-Restart Mode
- Small Size
- Option(Din-Rail Bracket Page 16)

Specifications

ITEM \ MODEL		WYNSP-30S05A	WYNSP-30S12A	WYNSP-30S24A	WYNSP-30S48A
INPUT	VOLTAGE	110VAC...0.4A/220VAC.....0.2A(Full Load) FREE VOLTAGE			
	FREQUENCY	50/60Hz (47~440Hz or DC)			
	EFFICIENCY	70% typ	75% typ	78% typ	78% typ
	INRUSHCURRENT	110VAC...4.5A/220VAC....9A(Io=100%, Ta=25°C at cold start)			
OUTPUT CIRCUIT	VOLTAGE (V)	5	12	24	48
	CURRENT (A)	6.0	2.5	1.3	0.6
	REGULATION LINE (mV)	25Max	60Max	120Max	240Max
	REGULATION LOAD (mV)	50Max	120Max	240Max	480Max
	RIPPLE (mVp-p)	50Max	120Max	240Max	480Max
	RIPPLE NOISE (mVp-p)	100Max	170Max	290Max	530Max
	TEMPERATURE DRIFT (mV) 0 ~ 50°C	50Max	120Max	240Max	480Max
	RISE TIME (mS)	100 Max (AC IN 85V Io = 100%)			
	HOLDING TIME (mS)	15 typ (AC IN 85V Io = 100%)			
PROTECTION CIRCUIT	OVER CURRENT PROTECTION	Works at over 110% of rating and recovers automatically			
	OVER VOLTAGE PROTECTION	–			
ELECTRICALLY ISOLATED	INPUT-OUTPUT	AC 1,500V 1minute, DC 500V 100MΩ (At room temperature & Humidity)			
	INPUT-CASE.FG	AC 1,500V 1minute, DC 500V 100MΩ (At room temperature & Humidity)			
	OUTPUT-CASE	AC 500V 1minute, DC 500V 100MΩ (At room temperature & Humidity)			
ENVIRONMENT	OPERATING TEMP.AND HUMID	0 ~ +50°C, 20 ~ 90% RH (Non Condensing)			
	STORAGE TEMP. AND HUMID	−20 ~ +75°C, 20 ~ 90% RH (Non Condensing)			
GENERAL	COOLING	Natural cooling			
	WEIGHT (kg)	0.3			

Derating Curve For Ambient

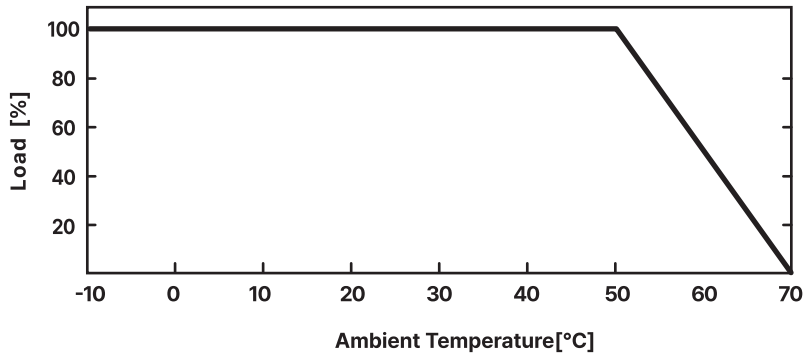

Derating Curve For Input Voltage

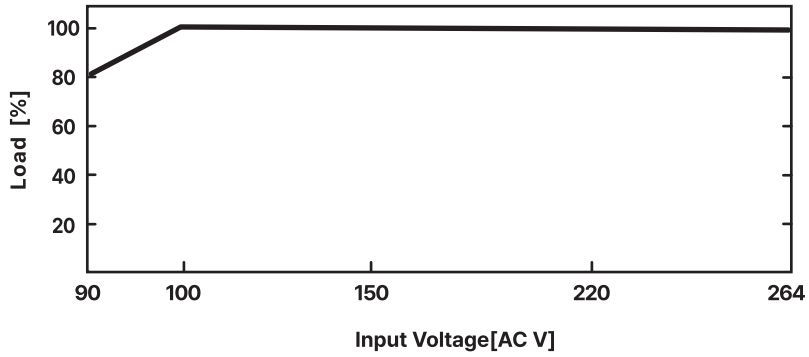

Dimension

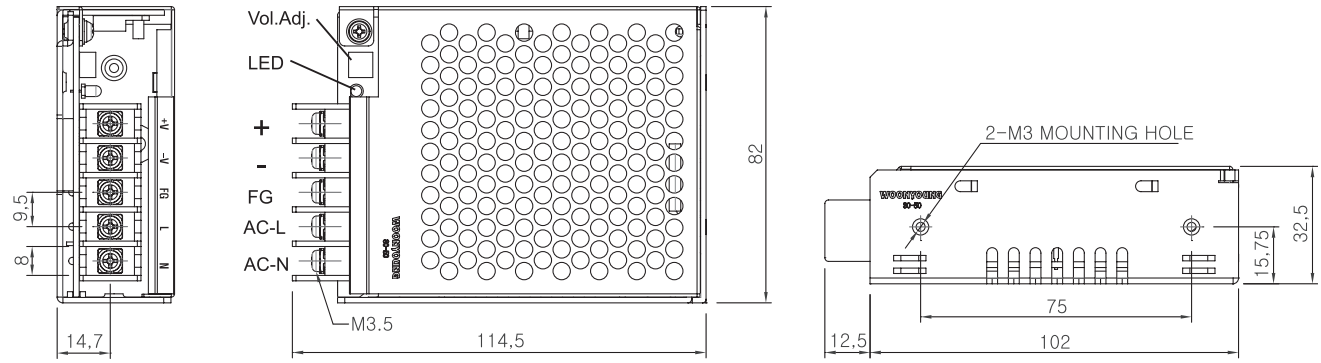

Terminal

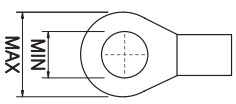

Max 7 , Min 3.5

NSP Series 50W



Features

- Input Voltage Range (AC90~264V)
- Built-in Inrush Current Limitter
- Over Current Protection
- Short Circuit Protection
- Over Temperature Protection
- Auto-Restart Mode
- Small Size
- Option(Din-Rail Bracket Page 16)

Specifications

ITEM \ MODEL		WYNSP-50S05A	WYNSP-50S12A	WYNSP-50S24A	WYNSP-50S48A
INPUT	VOLTAGE	110VAC...0.4A/220VAC.....0.2A(Full Load) FREE VOLTAGE			
	FREQUENCY	50/60Hz (47~440Hz or DC)			
	EFFICIENCY	70% typ	75% typ	78% typ	78% typ
	INRUSHCURRENT	110VAC...4.5A/220VAC....9A(Io=100%, Ta=25°C at cold start)			
OUTPUT CIRCUIT	VOLTAGE (V)	5	12	24	48
	CURRENT (A)	10.0	4.2	2.1	1.0
	REGULATION LINE (mV)	25Max	60Max	120Max	240Max
	REGULATION LOAD (mV)	50Max	120Max	240Max	480Max
	RIPPLE (mVp-p)	50Max	120Max	240Max	480Max
	RIPPLE NOISE (mVp-p)	100Max	170Max	290Max	530Max
	TEMPERATURE DRIFT (mV) 0 ~ 50°C	50Max	120Max	240Max	480Max
	RISE TIME (mS)	100 Max (AC IN 85V Io = 100%)			
	HOLDING TIME (mS)	15 typ (AC IN 85V Io = 100%)			
PROTECTION CIRCUIT	OVER CURRENT PROTECTION	Works at over 110% of rating and recovers automatically			
	OVER VOLTAGE PROTECTION	–			
ELECTRICALLY ISOLATED	INPUT-OUTPUT	AC 1,500V 1minute, DC 500V 100MΩ (At room temperature & Humidity)			
	INPUT-CASE.FG	AC 1,500V 1minute, DC 500V 100MΩ (At room temperature & Humidity)			
	OUTPUT-CASE	AC 500V 1minute, DC 500V 100MΩ (At room temperature & Humidity)			
ENVIRONMENT	OPERATING TEMP.AND HUMID	0 ~ +50°C, 20 ~ 90% RH (Non Condensing)			
	STORAGE TEMP. AND HUMID	−20 ~ +75°C, 20 ~ 90% RH (Non Condensing)			
GENERAL	COOLING	Natural cooling			
	WEIGHT (kg)	0.3			

NSP Series 50W

Derating Curve For Ambient

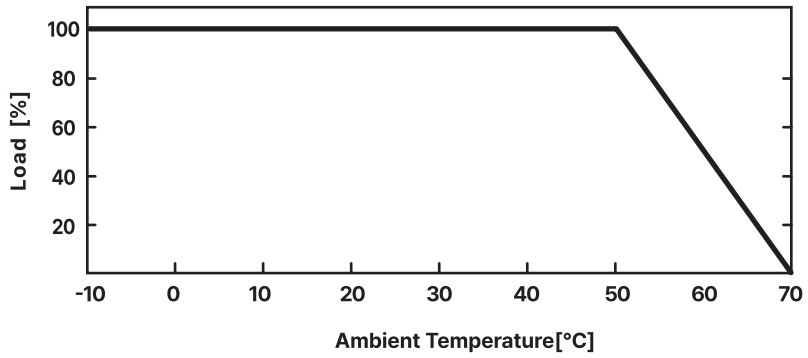

Derating Curve For Input Voltage

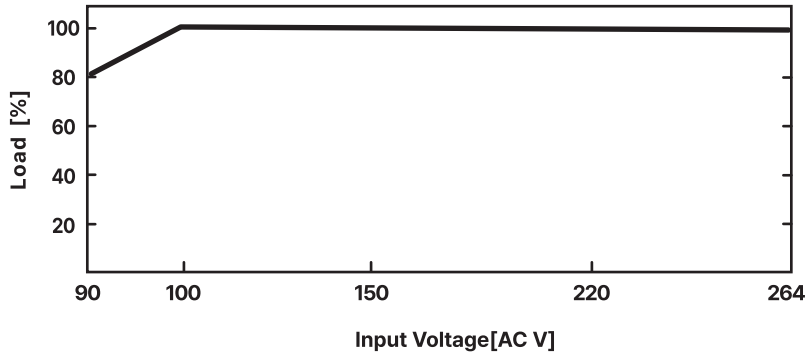

Dimension

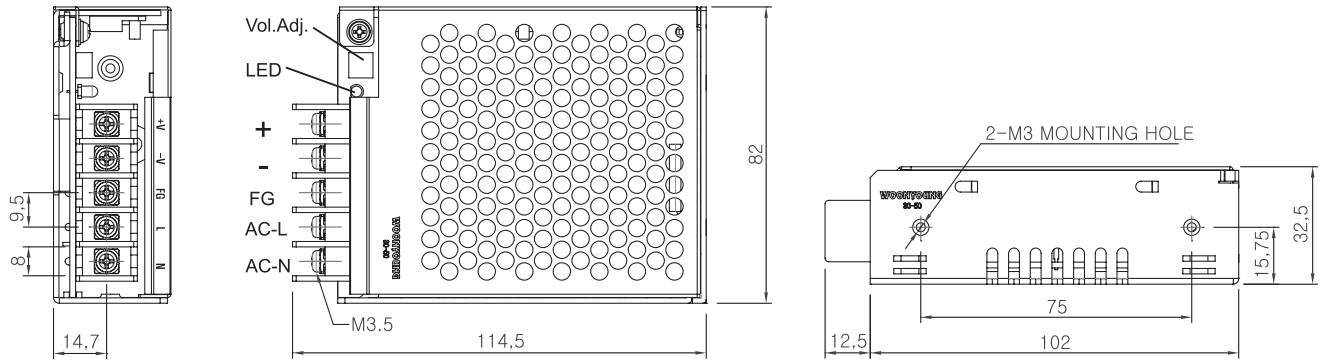

Terminal

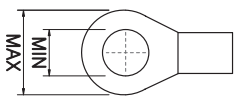

Max 7 , Min 3.5

NSP Series 75W





Features

- Input Voltage Range (AC170~264V)
- Built-in Inrush Current Limitter
- Over Current Protection
- Over Voltage Protection
- Short Circuit Protection
- Small Size
- Option(Din-Rail Bracket Page 16)

Specifications

ITEM \ MODEL		WYNSP-75S05A	WYNSP-75S12A	WYNSP-75S24A	WYNSP-75S48A
INPUT	VOLTAGE	220VAC...0.8A (Full Load)			
	FREQUENCY	50/60Hz (47~440Hz or DC)			
	EFFICIENCY	70% typ	70% typ	75% typ	75% typ
	INRUSHCURRENT	110VAC...6.2A/220VAC...13.5A(Io=100%, Ta=25°C at cold start)			
OUTPUT CIRCUIT	VOLTAGE (V)	5	12	24	48
	CURRENT (A)	15.0	6.3	3.2	1.6
	REGULATION LINE (mV)	25Max	60Max	120Max	240Max
	REGULATION LOAD (mV)	50Max	120Max	240Max	480Max
	RIPPLE (mVp-p)	50Max	120Max	240Max	480Max
	RIPPLE NOISE (mVp-p)	100Max	170Max	290Max	530Max
	TEMPERATURE DRIFT (mV) 0 ~ 50°C	50Max	120Max	240Max	480Max
	RISE TIME (mS)	100 Max (AC IN 180V Io = 100%)			
	HOLDING TIME (mS)	15 typ (AC IN 180V Io = 100%)			
PROTECTION CIRCUIT	OVER CURRENT PROTECTION	Works at over 110% of rating and recovers automatically			
	OVER VOLTAGE PROTECTION	Works at 115 ~ 140% of rating			
ELECTRICALLY ISOLATED	INPUT-OUTPUT	AC 1,500V 1minute, DC 500V 100MΩ (At room temperature & Humidity)			
	INPUT-CASE.FG	AC 1,500V 1minute, DC 500V 100MΩ (At room temperature & Humidity)			
	OUTPUT-CASE	AC 500V 1minute, DC 500V 100MΩ (At room temperature & Humidity)			
ENVIRONMENT	OPERATING TEMP.AND HUMID	0 ~ +50°C, 20 ~ 90% RH (Non Condensing)			
	STORAGE TEMP. AND HUMID	−20 ~ +75°C, 20 ~ 90% RH (Non Condensing)			
GENERAL	COOLING	Natural cooling			
	WEIGHT (kg)	0.4			

Derating Curve For Ambient

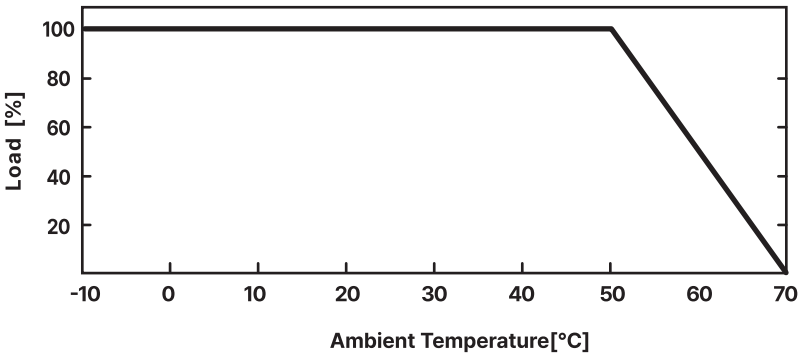

Derating Curve For Input Voltage

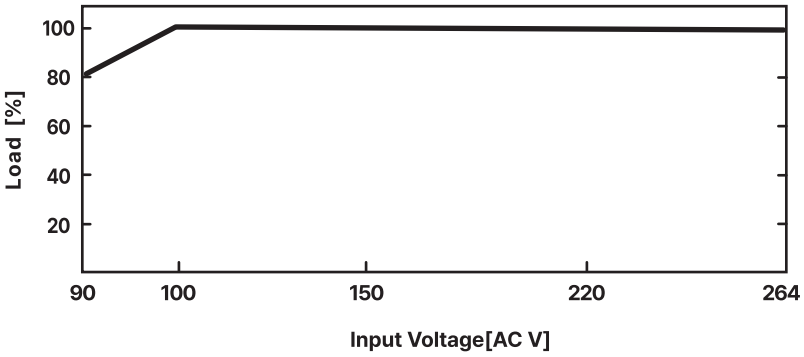

Dimension

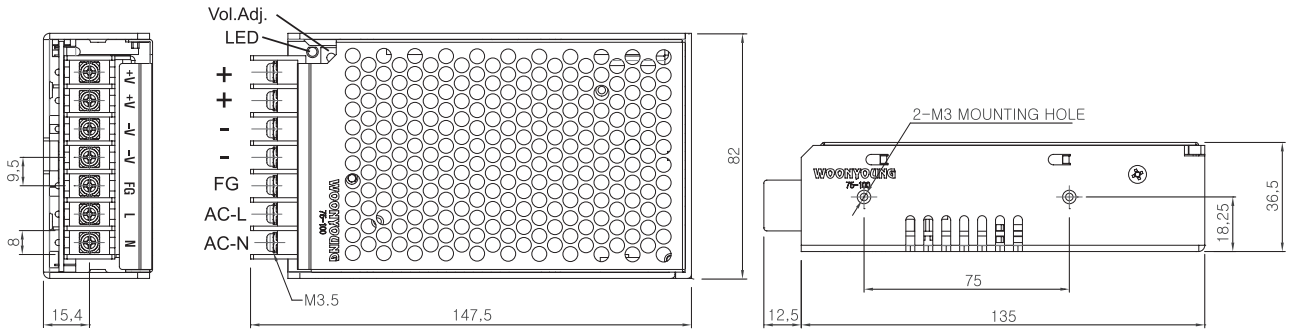

Terminal

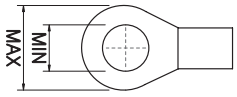

Max 7 , Min 3.5

NSP Series 100W





Features

- Input Voltage Range (AC170~264V)
- Built-in Inrush Current Limitter
- Over Current Protection
- Over Voltage Protection
- Short Circuit Protection
- Small Size
- Option(Din-Rail Bracket Page 16)

Specifications

ITEM \ MODEL		WYNSP-100S05A	WYNSP-100S12A	WYNSP-100S24A	WYNSP-100S48A
INPUT	VOLTAGE	220VAC...1.4A (Full Load)			
	FREQUENCY	50/60Hz (47~440Hz or DC)			
	EFFICIENCY	70% typ	70% typ	75% typ	75% typ
	INRUSHCURRENT	110VAC...14A/220VAC...28A(Io=100%, Ta=25°C at cold start)			
OUTPUT CIRCUIT	VOLTAGE (V)	5	12	24	48
	CURRENT (A)	20.0	8.4	4.2	2.1
	REGULATION LINE (mV)	25Max	60Max	120Max	240Max
	REGULATION LOAD (mV)	50Max	120Max	240Max	480Max
	RIPPLE (mVp-p)	50Max	120Max	240Max	480Max
	RIPPLE NOISE (mVp-p)	100Max	170Max	290Max	530Max
	TEMPERATURE DRIFT (mV) 0 ~ 50°C	50Max	120Max	240Max	480Max
	RISE TIME (mS)	100 Max (AC IN 180V Io = 100%)			
	HOLDING TIME (mS)	15 typ (AC IN 180V Io = 100%)			
PROTECTION CIRCUIT	OVER CURRENT PROTECTION	Works at over 110% of rating and recovers automatically			
	OVER VOLTAGE PROTECTION	Works at 115 ~ 140% of rating			
ELECTRICALLY ISOLATED	INPUT-OUTPUT	AC 1,500V 1minute, DC 500V 100MΩ (At room temperature & Humidity)			
	INPUT-CASE.FG	AC 1,500V 1minute, DC 500V 100MΩ (At room temperature & Humidity)			
	OUTPUT-CASE	AC 500V 1minute, DC 500V 100MΩ (At room temperature & Humidity)			
ENVIRONMENT	OPERATING TEMP.AND HUMID	0 ~ +50°C, 20 ~ 90% RH (Non Condensing)			
	STORAGE TEMP. AND HUMID	−20 ~ +75°C, 20 ~ 90% RH (Non Condensing)			
GENERAL	COOLING	Natural cooling			
	WEIGHT (kg)	0.4			

Derating Curve For Ambient

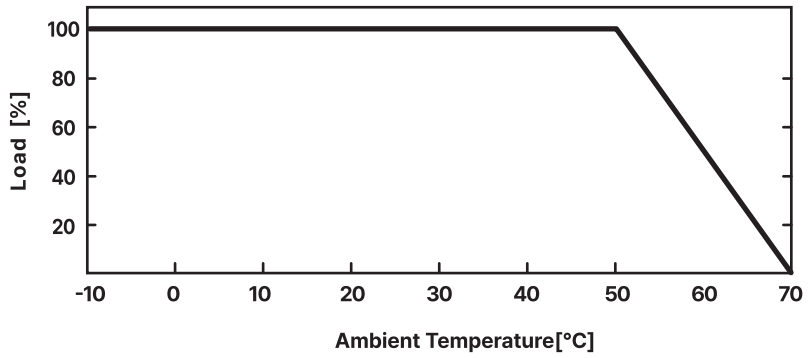

Derating Curve For Input Voltage

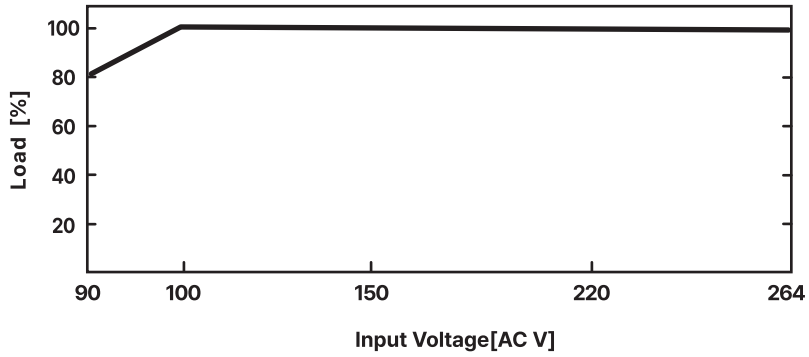

Dimension

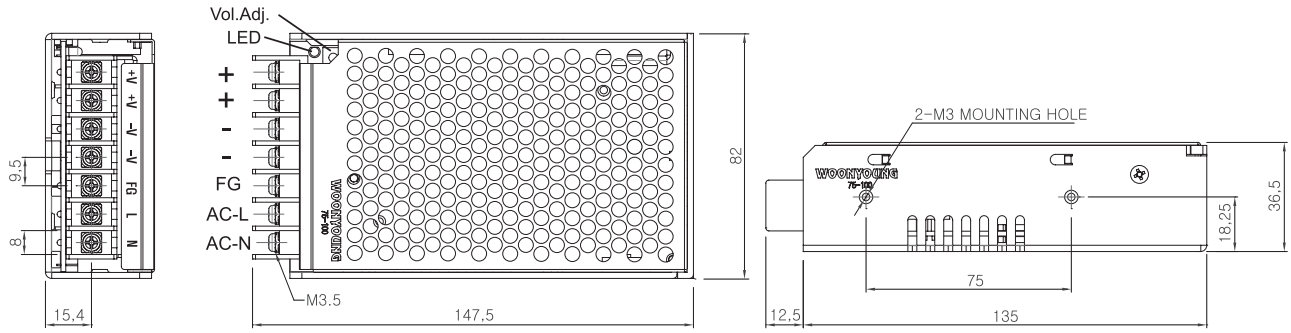

Terminal

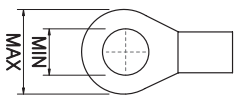

Max 7 , Min 3.5

NSP Series 120W

CE RoHS





Features

- Input Voltage Range (AC170 ~ 264V)
- Built-in Inrush Current Limitter
- Over Current Protection
- Over Voltage Protection
- Short Circuit Protection
- Small Size
- Option(Din-Rail Bracket Page 16)

Specifications

ITEM \ MODEL		WYNSP-120S05A	WYNSP-120S12A	WYNSP-120S24A	WYNSP-120S48A
INPUT	VOLTAGE	220VAC...1.5A (Full Load)			
	FREQUENCY	50/60Hz (47 ~ 440Hz or DC)			
	EFFICIENCY	75% typ	75% typ	75% typ	75% typ
	INRUSHCURRENT	110VAC...14A/110VAC...14A/220VAC...28A (Io=100%, Ta=25°C at cold start)			
OUTPUT CIRCUIT	VOLTAGE (V)	5	12	24	48
	CURRENT (A)	24.0	10.0	5.0	2.5
	REGULATION LINE (mV)	25Max	60Max	120Max	240Max
	REGULATION LOAD (mV)	50Max	120Max	240Max	480Max
	RIPPLE (mVp-p)	50Max	120Max	240Max	480Max
	RIPPLE NOISE (mVp-p)	100Max	170Max	290Max	530Max
	TEMPERATURE DRIFT (mV) 0 ~ 50°C	50Max	120Max	240Max	480Max
	RISE TIME (mS)	100 Max (AC IN 180V Io = 100%)			
	HOLDING TIME (mS)	15 typ (AC IN 180V Io = 100%)			
PROTECTION CIRCUIT	OVER CURRENT PROTECTION	Works at over 110% of rating and recovers automatically			
	OVER VOLTAGE PROTECTION	Works at 115 ~ 140% of rating			
ELECTRICALLY ISOLATED	INPUT-OUTPUT	AC 1,500V 1minute, DC 500V 100MΩ (At room temperature & Humidity)			
	INPUT-CASE.FG	AC 1,500V 1minute, DC 500V 100MΩ (At room temperature & Humidity)			
	OUTPUT-CASE	AC 500V 1minute, DC 500V 100MΩ (At room temperature & Humidity)			
ENVIRONMENT	OPERATING TEMP.AND HUMID	0 ~ +50°C, 20 ~ 90% RH (Non Condensing)			
	STORAGE TEMP. AND HUMID	-20 ~ +75°C, 20 ~ 90% RH (Non Condensing)			
GENERAL	COOLING	Natural cooling			
	WEIGHT (kg)	0.6			

Derating Curve For Ambient

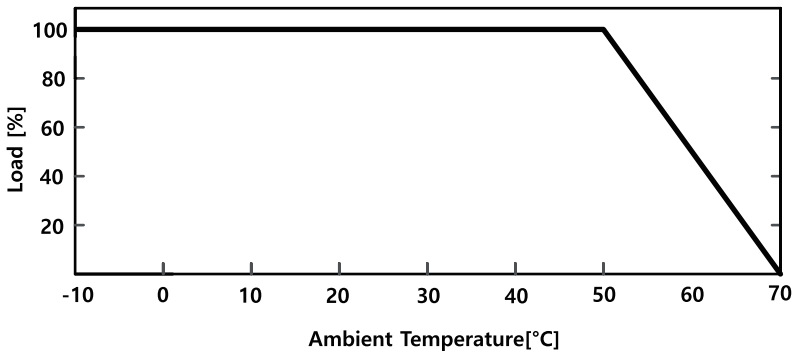

Derating Curve For Input Voltage

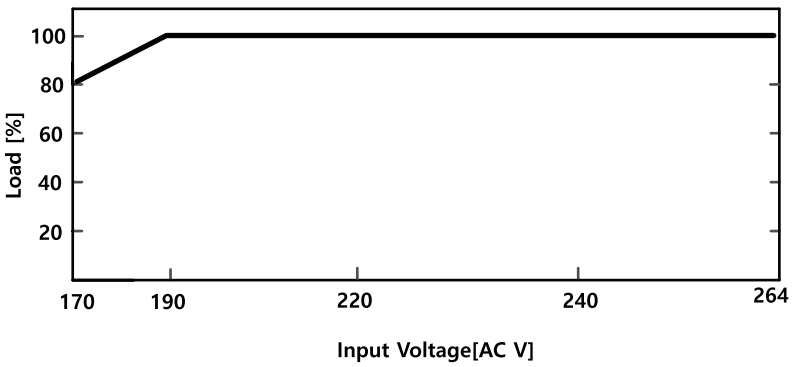

Dimension

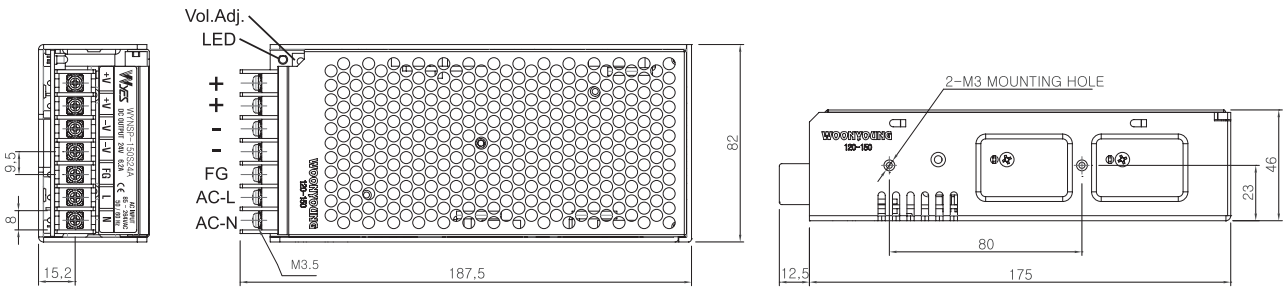

Terminal

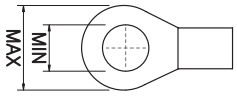

Max 7 , Min 3.5

NSP Series 150W

CE RoHS





Features

- Input Voltage Range (AC170 ~ 264V)
- Built-in Inrush Current Limitter
- Over Current Protection
- Over Voltage Protection
- Short Circuit Protection
- Small Size
- Option(Din－Rail Bracket Page 16)

Specifications

ITEM \ MODEL		WYNSP－150S05A	WYNSP－150S12A	WYNSP－150S24A	WYNSP－150S48A
INPUT	VOLTAGE	220VAC...2.1A (Full Load)			
	FREQUENCY	50/60Hz (47 ~ 440Hz or DC)			
	EFFICIENCY	75% typ	75% typ	78% typ	78% typ
	INRUSHCURRENT	220VAC...28A(Io=100%, Ta=25°C at cold start)			
OUTPUT CIRCUIT	VOLTAGE (V)	5	12	24	48
	CURRENT (A)	30.0	12.5	6.3	3.2
	REGULATION LINE (mV)	25Max	60Max	120Max	240Max
	REGULATION LOAD (mV)	50Max	120Max	240Max	480Max
	RIPPLE (mVp－p)	50Max	120Max	240Max	480Max
	RIPPLE NOISE (mVp－p)	100Max	170Max	290Max	530Max
	TEMPERATURE DRIFT (mV) 0 ~ 50°C	50Max	120Max	240Max	480Max
	RISE TIME (mS)	100 Max (AC IN 180V Io = 100%)			
	HOLDING TIME (mS)	15 typ (AC IN 180V Io = 100%)			
PROTECTION CIRCUIT	OVER CURRENT PROTECTION	Works at over 110% of rating and recovers automatically			
	OVER VOLTAGE PROTECTION	Works at 115 ~ 140% of rating			
ELECTRICALLY ISOLATED	INPUT－OUTPUT	AC 1,500V 1minute, DC 500V 100MΩ (At room temperature & Humidity)			
	INPUT－CASE.FG	AC 1,500V 1minute, DC 500V 100MΩ (At room temperature & Humidity)			
	OUTPUT－CASE	AC 500V 1minute, DC 500V 100MΩ (At room temperature & Humidity)			
ENVIRONMENT	OPERATING TEMP.AND HUMID	0 ~ +50°C, 20 ~ 90% RH (Non Condensing)			
	STORAGE TEMP. AND HUMID	−20 ~ +75°C, 20 ~ 90% RH (Non Condensing)			
GENERAL	COOLING	Natural cooling			
	WEIGHT (kg)	0.6			

NSP Series 150W

CE RoHS

Derating Curve For Ambient

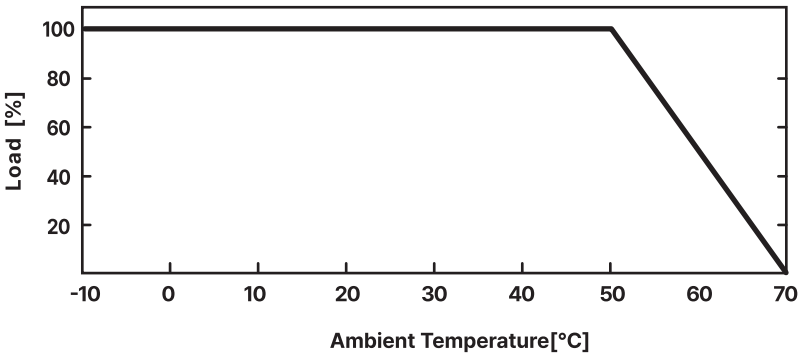

Derating Curve For Input Voltage

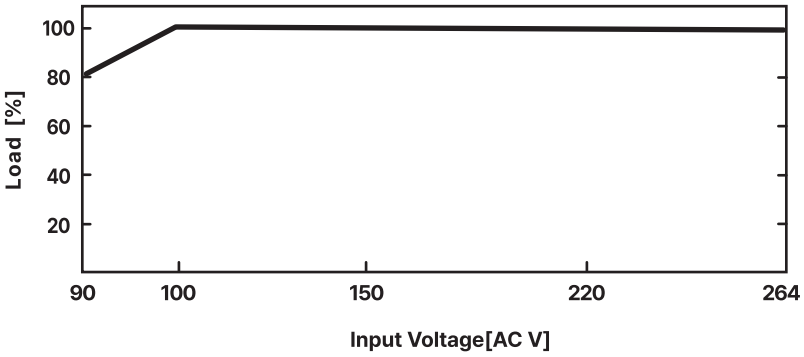

Dimension

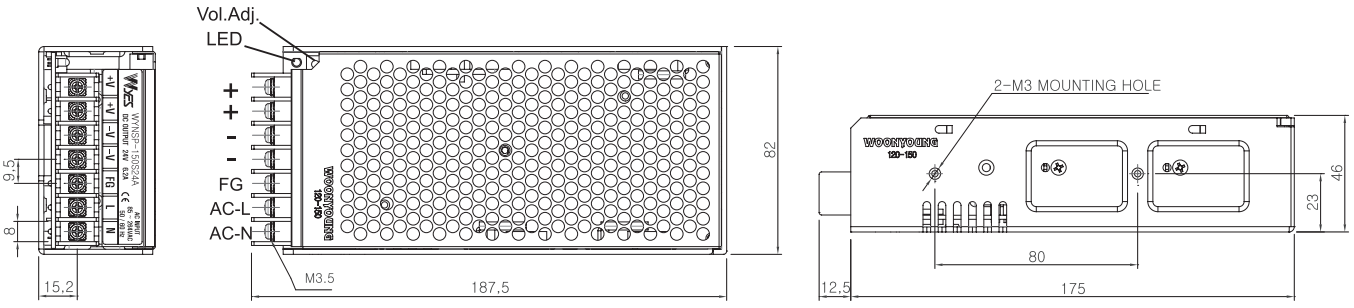

Terminal

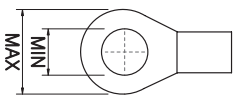

Max 7 , Min 3.5

NSP Series (역률개선용) 200W

CE RoHS



Features

- Input Voltage Range (AC170 ~ 264V)
- Built-in Inrush Current Limitter
- Over Current Protection
- Over Voltage Protection
- Short Circuit Protection
- Small Size

Specifications

ITEM \ MODEL		WYNSP-200S05A	WYNSP-200S12A	WYNSP-200S24A	WYNSP-200S48A
INPUT	VOLTAGE	220VAC...2.1A (Full Load)			
	FREQUENCY	50/60Hz (47 ~ 440Hz or DC)			
	EFFICIENCY	75% typ	75% typ	78% typ	78% typ
	INRUSHCURRENT	110VAC...14A/110VAC...14A/220VAC...28A (Io=100%, Ta=25°C at cold start)			
OUTPUT CIRCUIT	VOLTAGE (V)	5	12	24	48
	CURRENT (A)	40.0	16.7	8.3	4.2
	REGULATION LINE (mV)	25Max	60Max	120Max	240Max
	REGULATION LOAD (mV)	50Max	120Max	240Max	480Max
	RIPPLE (mVp-p)	50Max	120Max	240Max	480Max
	RIPPLE NOISE (mVp-p)	100Max	170Max	290Max	530Max
	TEMPERATURE DRIFT (mV) 0 ~ 50°C	50Max	120Max	240Max	480Max
	RISE TIME (mS)	100 Max (AC IN 180V Io = 100%)			
	HOLDING TIME (mS)	15 typ (AC IN 180V Io = 100%)			
PROTECTION CIRCUIT	OVER CURRENT PROTECTION	Works at over 110% of rating and recovers automatically			
	OVER VOLTAGE PROTECTION	Works at 115 ~ 140% of rating			
ELECTRICALLY ISOLATED	INPUT-OUTPUT	AC 1,500V 1minute, DC 500V 100MΩ (At room temperature & Humidity)			
	INPUT-CASE.FG	AC 1,500V 1minute, DC 500V 100MΩ (At room temperature & Humidity)			
	OUTPUT-CASE	AC 500V 1minute, DC 500V 100MΩ (At room temperature & Humidity)			
ENVIRONMENT	OPERATING TEMP.AND HUMID	0 ~ +50°C, 20 ~ 90% RH (Non Condensing)			
	STORAGE TEMP. AND HUMID	-20 ~ +75°C, 20 ~ 90% RH (Non Condensing)			
GENERAL	COOLING	Fan cooling			
	WEIGHT (kg)	1.0			

NSP Series (역률개선용) 200W

CE RoHS

Derating Curve For Ambient

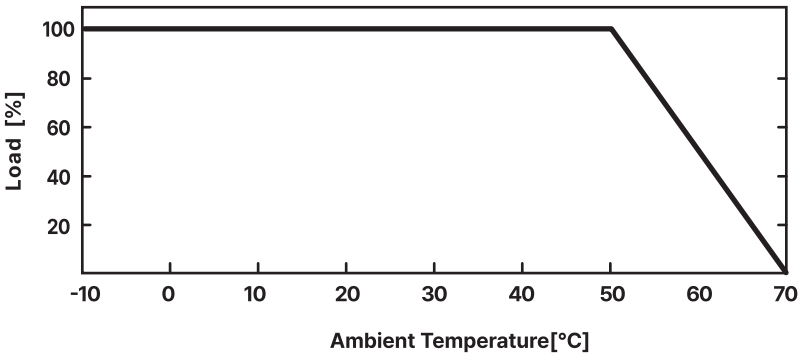

Derating Curve For Input Voltage

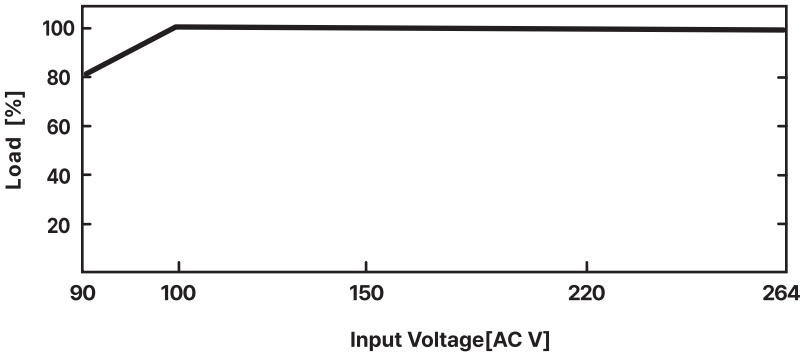

Dimension

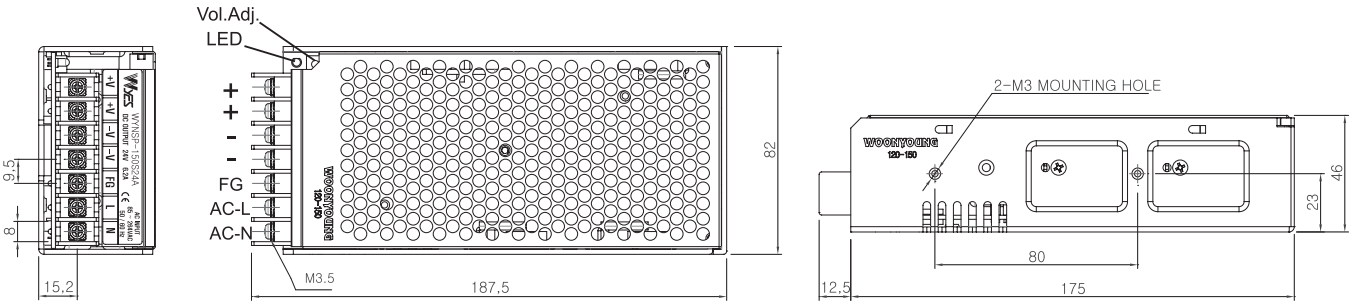

Terminal

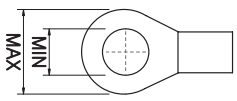

Max 7 , Min 3.5

NSP Series 250W

CE RoHS



Features

- Input Voltage Range (AC170 ~ 264V)
- Built-in Inrush Current Limitter
- Over Current Protection
- Over Voltage Protection
- Short Circuit Protection
- Small Size

Specifications

ITEM \ MODEL		WYNSP-250S05A	WYNSP-250S12A	WYNSP-250S24A	WYNSP-250S48A
INPUT	VOLTAGE	220VAC...2.1A (Full Load)			
	FREQUENCY	50/60Hz (47 ~ 440Hz or DC)			
	EFFICIENCY	75% typ	75% typ	75% typ	75% typ
	INRUSHCURRENT	110VAC...14A/220VAC...28A(Io=100%, Ta=25°C at cold start)			
OUTPUT CIRCUIT	VOLTAGE (V)	5	12	24	48
	CURRENT (A)	50.0	20.9	10.5	5.3
	REGULATION LINE (mV)	60Max	75Max	120Max	240Max
	REGULATION LOAD (mV)	120Max	150Max	240Max	480Max
	RIPPLE (mVp-p)	120Max	150Max	240Max	480Max
	RIPPLE NOISE (mVp-p)	170Max	200Max	290Max	530Max
	TEMPERATURE DRIFT (mV) 0 ~ 50°C	120Max	150Max	240Max	480Max
	RISE TIME (mS)	100 Max (AC IN 180V Io = 100%)			
	HOLDING TIME (mS)	15 typ (AC IN 180V Io = 100%)			
PROTECTION CIRCUIT	OVER CURRENT PROTECTION	Works at over 110% of rating and recovers automatically			
	OVER VOLTAGE PROTECTION	Works at 115 ~ 140% of rating			
ELECTRICALLY ISOLATED	INPUT-OUTPUT	AC 1,500V 1minute, DC 500V 100MΩ (At room temperature & Humidity)			
	INPUT-CASE.FG	AC 1,500V 1minute, DC 500V 100MΩ (At room temperature & Humidity)			
	OUTPUT-CASE	AC 500V 1minute, DC 500V 100MΩ (At room temperature & Humidity)			
ENVIRONMENT	OPERATING TEMP.AND HUMID	0 ~ +50°C, 20 ~ 90% RH (Non Condensing)			
	STORAGE TEMP. AND HUMID	-20 ~ +75°C, 20 ~ 90% RH (Non Condensing)			
GENERAL	COOLING	Fan cooling			
	WEIGHT (kg)	1.0			

Derating Curve For Ambient

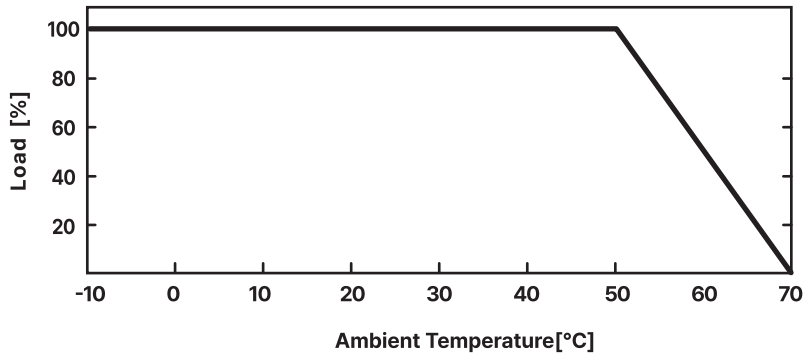

Derating Curve For Input Voltage

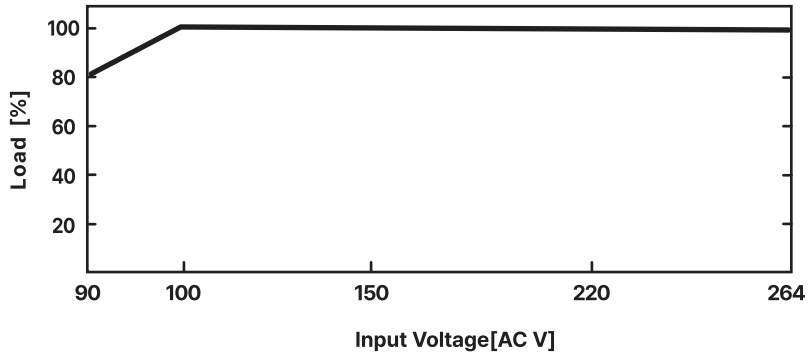

Dimension

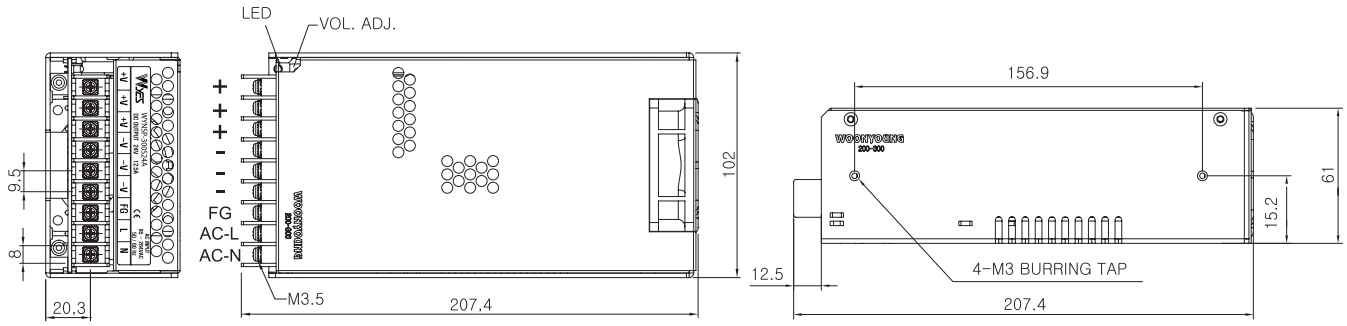

Terminal

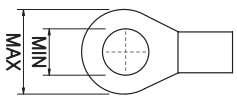

Max 7 , Min 3.5

NSP Series 300W

CE RoHS



Features

- Input Voltage Range (AC170 ~ 264V)
- Built-in Inrush Current Limitter
- Over Current Protection
- Over Voltage Protection
- Short Circuit Protection
- Small Size

Specifications

ITEM \ MODEL		WYNSP-300S05A	WYNSP-300S12A	WYNSP-300S24A	WYNSP-300S48A
INPUT	VOLTAGE	220VAC... 3.5A (Full Load)			
	FREQUENCY	50/60Hz (47 ~ 440Hz or DC)			
	EFFICIENCY	75% typ	75% typ	80% typ	80% typ
	INRUSHCURRENT	110VAC...14A/110VAC...14A/220VAC...28A (Io=100%, Ta=25°C at cold start)			
OUTPUT CIRCUIT	VOLTAGE (V)	5	12	24	48
	CURRENT (A)	60.0	25.0	12.5	6.3
	REGULATION LINE (mV)	25Max	60Max	120Max	240Max
	REGULATION LOAD (mV)	50Max	120Max	240Max	480Max
	RIPPLE (mVp-p)	50Max	120Max	240Max	480Max
	RIPPLE NOISE (mVp-p)	100Max	170Max	290Max	530Max
	TEMPERATURE DRIFT (mV) 0 ~ 50°C	50Max	120Max	240Max	480Max
	RISE TIME (mS)	100 Max (AC IN 180V Io = 100%)			
	HOLDING TIME (mS)	15 typ (AC IN 180V Io = 100%)			
PROTECTION CIRCUIT	OVER CURRENT PROTECTION	Works at over 110% of rating and recovers automatically			
	OVER VOLTAGE PROTECTION	Works at 115 ~ 140% of rating			
ELECTRICALLY ISOLATED	INPUT-OUTPUT	AC 1,500V 1minute, DC 500V 100MΩ (At room temperature & Humidity)			
	INPUT-CASE.FG	AC 1,500V 1minute, DC 500V 100MΩ (At room temperature & Humidity)			
	OUTPUT-CASE	AC 500V 1minute, DC 500V 100MΩ (At room temperature & Humidity)			
ENVIRONMENT	OPERATING TEMP.AND HUMID	0 ~ +50°C, 20 ~ 90% RH (Non Condensing)			
	STORAGE TEMP. AND HUMID	-20 ~ +75°C, 20 ~ 90% RH (Non Condensing)			
GENERAL	COOLING	Fan cooling			
	WEIGHT (kg)	1.0			

Derating Curve For Ambient

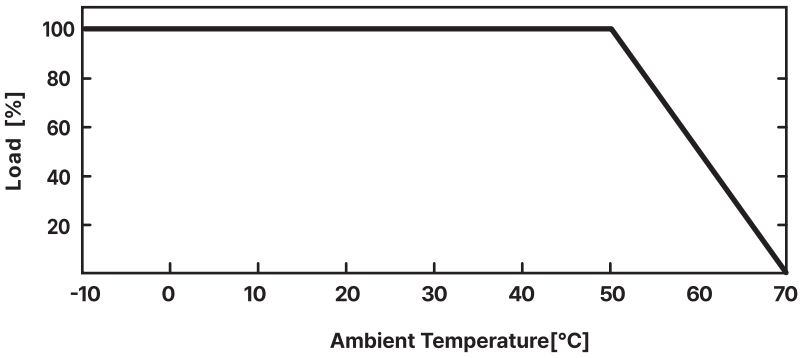

Derating Curve For Input Voltage

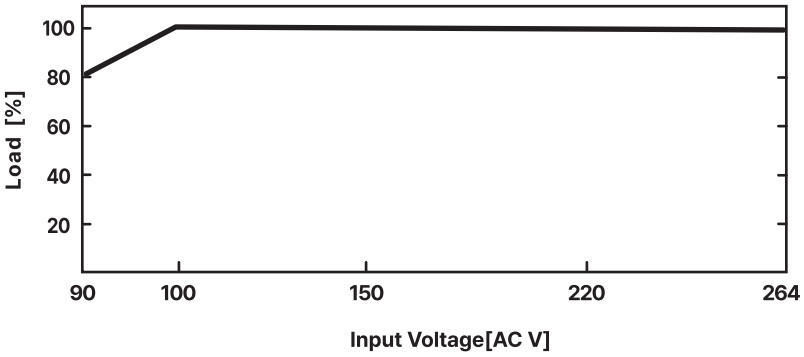

Dimension

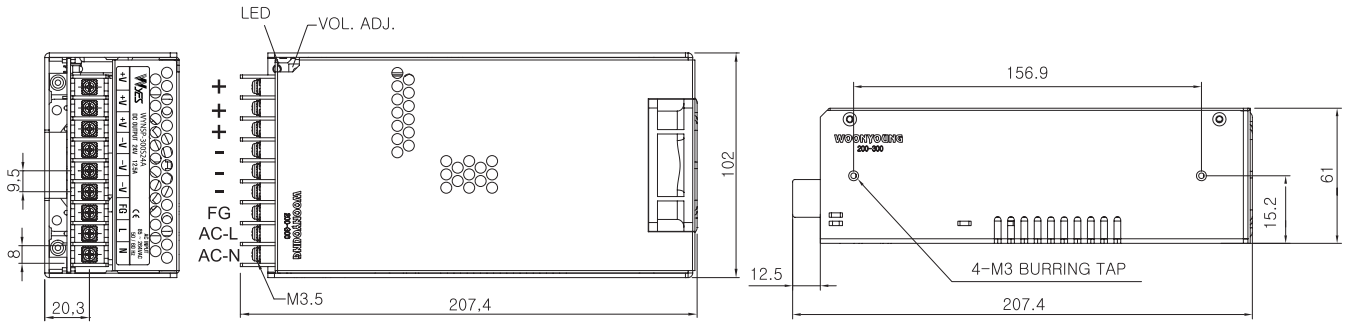

Terminal

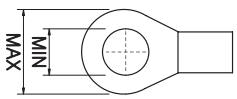

Max 7 , Min 3.5

NSP Series (역률개선용) 75W

CE RoHS

PFC Type





Features

- Input Voltage Range (AC90~264V)
- Built-in PFC
- Built-in Inrush Current Limitter
- Over Current Protection
- Over Voltage Protection
- Short Circuit Protection
- Small Size
- Option(Din-Rail Bracket Page 16)

Specifications

ITEM \ MODEL		WYNSP-75S05AP	WYNSP-75S12AP	WYNSP-75S24AP	WYNSP-75S48AP
INPUT	VOLTAGE	110VAC...2.5A/220VAC...1.4A(FullLoad) FREEVOLTAGE			
	FREQUENCY	50/60Hz (47~440Hz or DC)			
	EFFICIENCY	70% typ	70% typ	75% typ	75% typ
	INRUSHCURRENT	110VAC...14A / 220VAC...28A(Io=100%, Ta=25°C at cold start)			
	Power Factor(Lo=100%)	0.97 tpy			
OUTPUT CIRCUIT	VOLTAGE (V)	5	12	24	48
	CURRENT (A)	15.0	6.3	3.2	1.6
	REGULATION LINE (mV)	25Max	60Max	120Max	240Max
	REGULATION LOAD (mV)	50Max	120Max	240Max	480Max
	RIPPLE (mVp-p)	50Max	120Max	240Max	480Max
	RIPPLE NOISE (mVp-p)	100Max	170Max	290Max	530Max
	TEMPERATURE DRIFT 0 ~ 50°C (mV)	50Max	120Max	240Max	480Max
	RISE TIME (mS)	200 Max (AC IN 90V/180V Io = 100%)			
	HOLDING TIME (mS)	15 typ (AC IN 90V/ 180V Io = 100%)			
PROTECTION CIRCUIT	OVER CURRENT PROTECTION	Works at over 110% of rating and recovers automatically			
	OVER VOLTAGE PROTECTION	Works at 115 ~ 140% of rating			
ELECTRICALLY ISOLATED	INPUT-OUTPUT	AC 1,500V 1minute, DC 500V 100MΩ (At room temperature & Humidity)			
	INPUT-CASE.FG	AC 1,500V 1minute, DC 500V 100MΩ (At room temperature & Humidity)			
	OUTPUT-CASE	AC 500V 1minute, DC 500V 100MΩ (At room temperature & Humidity)			
ENVIRONMENT	OPERATING TEMP.AND HUMID	0 ~ +50°C, 20 ~ 90% RH (Non Condensing)			
	STORAGE TEMP. AND HUMID	-20 ~ +75°C, 20 ~ 90% RH (Non Condensing)			
GENERAL	COOLING	Natural cooling			
	WEIGHT (kg)	0.5			

NSP Series (역률개선용) 75W

CE RoHS

Derating Curve For Ambient

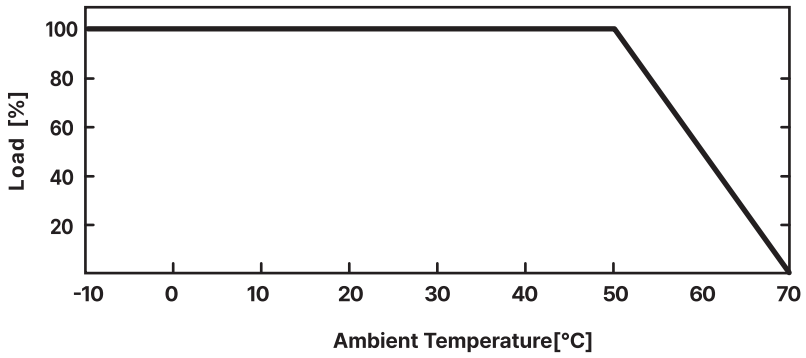

Derating Curve For Input Voltage

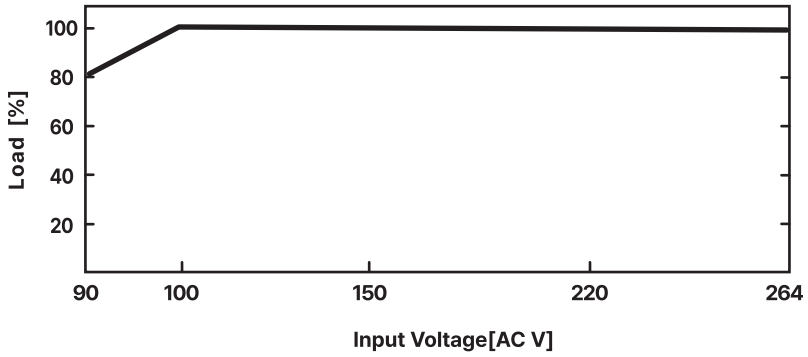

Dimension

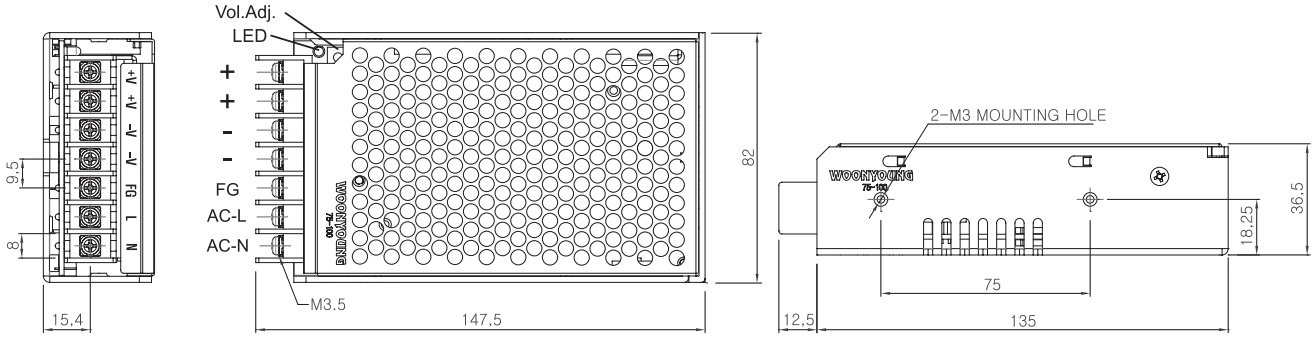

Terminal

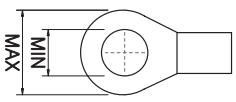

Max 7 , Min 3.5

NSP Series (역률개선용) 100W

CE RoHS

PFC Type





Features

- Input Voltage Range (AC90~264V)
- Built-in PFC
- Built-in Inrush Current Limitter
- Over Current Protection
- Over Voltage Protection
- Short Circuit Protection
- Small Size
- Option(Din-Rail Bracket Page 16)

Specifications

ITEM \ MODEL		WYNSP-100S05AP	WYNSP-100S12AP	WYNSP-100S24AP	WYNSP-100S48AP
Input	Voltage	110VAC...2.5A/220VAC...1.4A (Full Load) FREE VOLTAGE			
	Frequency	50/60Hz (47~440Hz or DC)			
	Efficlency	70% typ	70% typ	75% typ	75% typ
	Inrushcurrent	110VAC...14A/220VAC...28A(Io=100%, Ta=25°C at cold start)			
	Power Factor(Lo=100%)	0.97 tpy			
Output	Voltage (V)	5	12	24	48
	Current (A)	20.0	8.4	4.2	2.1
	Regulation Line (mV)	25Max	60Max	120Max	240Max
	Regulation Load (mV)	50Max	120Max	240Max	480Max
	Ripple (mVp-p)	50Max	120Max	240Max	480Max
	Ripple Noise (mVp-p)	100Max	170Max	290Max	530Max
	Temperature Drift 0~50°C	50Max	120Max	240Max	480Max
	Rise Time (mS).	200 Max (AC IN 90V/180V Io = 100%)			
	Holding Time (mS)	15 typ (AC IN 90V/180V Io = 100%)			
Protectioncircuit	Over Current Protection	Works at over 110% of rating and recovers automatically			
	Over Voltage Protection	Works at 115 ~ 140% of rating			
Electrically Isolated	Input-Output	AC 1,500V 1 minute, DC 500V 100MΩ(At room temperature & Humidity)			
	Input-Case and FG	AC 1,500V 1 minute, DC 500V 100MΩ(At room temperature & Humidity)			
	Output-Case	AC 500V 1 minute, DC 500V 100MΩ(At room temperature & Humidity)			
Environment	Operationtemp. and Humid	0 ~ +50°C , 20 ~ 90% RH (Non Condensing)			
	Storgetemp. and Humid	-20 ~ +75°C , 20 ~ 90% RH (Non Condensing)			
General	Cooling	Natural cooling			
	Weight (kg)	0.5			

NSP Series (역률개선용) 100W

CE RoHS

Derating Curve For Ambient

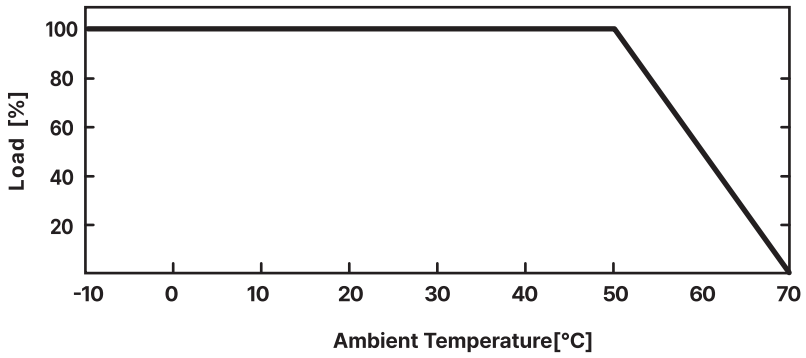

Derating Curve For Input Voltage

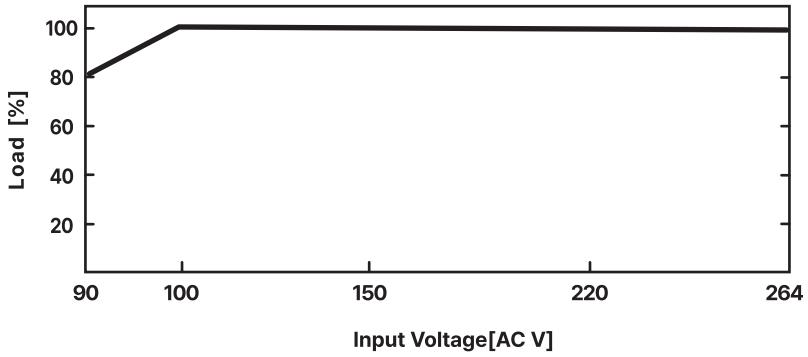

Dimension

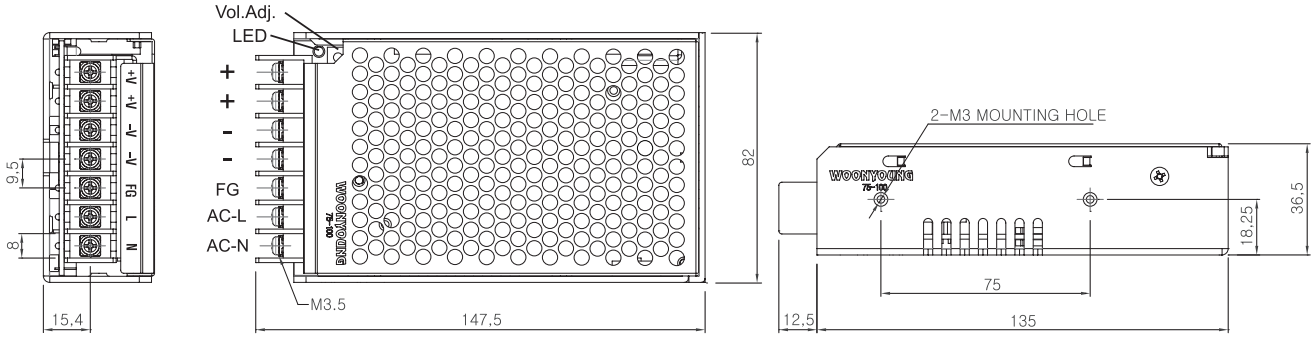

Terminal

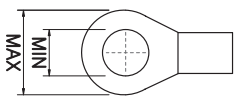

Max 7 , Min 3.5

NSP Series (역률개선용) 120W

PFC Type





Features

- Input Voltage Range (AC90~264V)
- Built-in PFC
- Built-in Inrush Current Limitter
- Over Current Protection
- Over Voltage Protection
- Short Circuit Protection
- Small Size
- Option(Din-Rail Bracket Page 16)

Specifications

ITEM \ MODEL		WYNSP-120S05AP	WYNSP-120S12AP	WYNSP-120S24AP	WYNSP-120S48AP
INPUT	VOLTAGE	110VAC...3.0A / 220VAC...1.5A (Full Load) FREEVOLTAGE			
	FREQUENCY	50/60Hz (47~440Hz or DC)			
	EFFICIENCY	75% typ	75% typ	75% typ	75% typ
	INRUSHCURRENT	110VAC...14A / 220VAC...28A(Io=100%, Ta=25°C at cold start)			
	Power Factor (Io=100%)	0.97 typ			
OUTPUT CIRCUIT	VOLTAGE (V)	5	12	24	48
	CURRENT (A)	24.0	10.0	5.0	2.5
	REGULATION LINE (mV)	25Max	60Max	120Max	240Max
	REGULATION LOAD (mV)	50Max	120Max	240Max	480Max
	RIPPLE (mVp-p)	50Max	120Max	240Max	480Max
	RIPPLE NOISE (mVp-p)	100Max	170Max	290Max	530Max
	TEMPERATURE DRIFT 0 ~ 50°C (mV)	50Max	120Max	240Max	480Max
	RISE TIME (mS)	200 Max (AC IN 90V/180V Io = 100%)			
	HOLDING TIME (mS)	15 typ (AC IN 90V/ 180V Io = 100%)			
PROTECTION CIRCUIT	OVER CURRENT PROTECTION	Works at over 110% of rating and recovers automatically			
	OVER VOLTAGE PROTECTION	Works at 115 ~ 140% of rating			
ELECTRICALLY ISOLATED	INPUT-OUTPUT	AC 1,500V 1minute, DC 500V 100MΩ (At room temperature & Humidity)			
	INPUT-CASE.FG	AC 1,500V 1minute, DC 500V 100MΩ (At room temperature & Humidity)			
	OUTPUT-CASE	AC 500V 1minute, DC 500V 100MΩ (At room temperature & Humidity)			
ENVIRONMENT	OPERATING TEMP.AND HUMID	0 ~ +50°C, 20 ~ 90% RH (Non Condensing)			
	STORAGE TEMP. AND HUMID	−20 ~ +75°C, 20 ~ 90% RH (Non Condensing)			
GENERAL	COOLING	Natural cooling			
	WEIGHT (kg)	0.6			

NSP Series (역률개선용) 120W

Derating Curve For Ambient

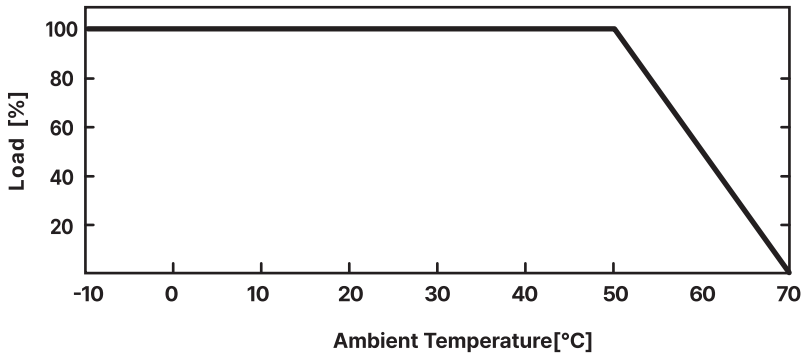

Derating Curve For Input Voltage

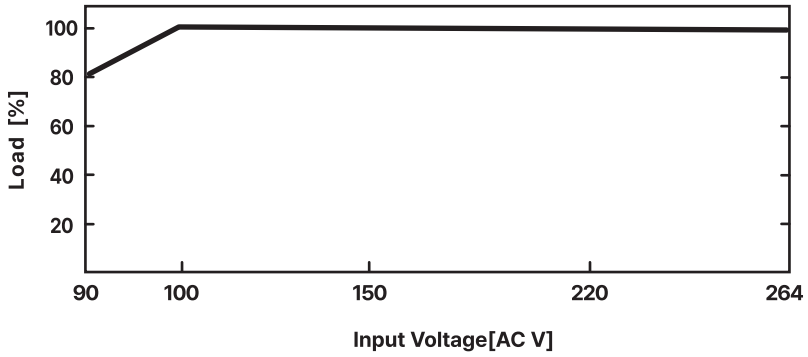

Dimension

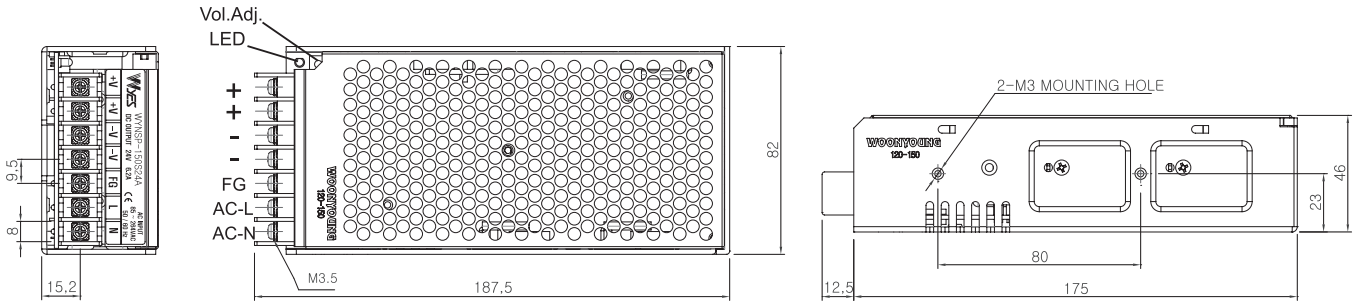

Terminal

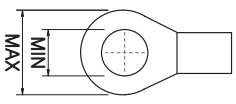

Max 7 , Min 3.5

NSP Series (역률개선용) 150W

PFC Type





Features

- Input Voltage Range (AC90~264V)
- Built-in PFC
- Built-in Inrush Current Limitter
- Over Current Protection
- Over Voltage Protection
- Short Circuit Protection
- Small Size
- Option(Din-Rail Bracket Page 16)

Specifications

ITEM \ MODEL		WYNSP-150S05AP	WYNSP-150S12AP	WYNSP-150S24AP	WYNSP-150S48AP
INPUT	VOLTAGE	110VAC...3.7A / 220VAC...2.1A (Full Load) FREEVOLTAGE			
	FREQUENCY	50/60Hz (47~440Hz or DC)			
	EFFICIENCY	75% typ	75% typ	78% typ	78% typ
	INRUSHCURRENT	110VAC...14A / 220VAC...28A(Io=100%, Ta=25°C at cold start)			
	Power Factor (Io=100%)	0.97 typ			
OUTPUT CIRCUIT	VOLTAGE (V)	5	12	24	48
	CURRENT (A)	30.0	12.5	6.3	3.
	REGULATION LINE (mV)	25Max	60Max	120Max	240Max
	REGULATION LOAD (mV)	50Max	120Max	240Max	480Max
	RIPPLE (mVp-p)	50Max	120Max	240Max	480Max
	RIPPLE NOISE (mVp-p)	100Max	170Max	290Max	530Max
	TEMPERATURE DRIFT 0 ~ 50°C (mV)	50Max	120Max	240Max	480Max
	RISE TIME (mS)	200 Max (AC IN 90V/180V Io = 100%)			
	HOLDING TIME (mS)	15 typ (AC IN 90V/ 180V Io = 100%)			
PROTECTION CIRCUIT	OVER CURRENT PROTECTION	Works at over 110% of rating and recovers automatically			
	OVER VOLTAGE PROTECTION	Works at 115 ~ 140% of rating			
ELECTRICALLY ISOLATED	INPUT-OUTPUT	AC 1,500V 1minute, DC 500V 100MΩ (At room temperature & Humidity)			
	INPUT-CASE.FG	AC 1,500V 1minute, DC 500V 100MΩ (At room temperature & Humidity)			
	OUTPUT-CASE	AC 500V 1minute, DC 500V 100MΩ (At room temperature & Humidity)			
ENVIRONMENT	OPERATING TEMP.AND HUMID	0 ~ +50°C, 20 ~ 90% RH (Non Condensing)			
	STORAGE TEMP. AND HUMID	−20 ~ +75°C, 20 ~ 90% RH (Non Condensing)			
GENERAL	COOLING	Natural cooling			
	WEIGHT (kg)	0.6			

NSP Series (역률개선용) 150W

● Derating Curve For Ambient

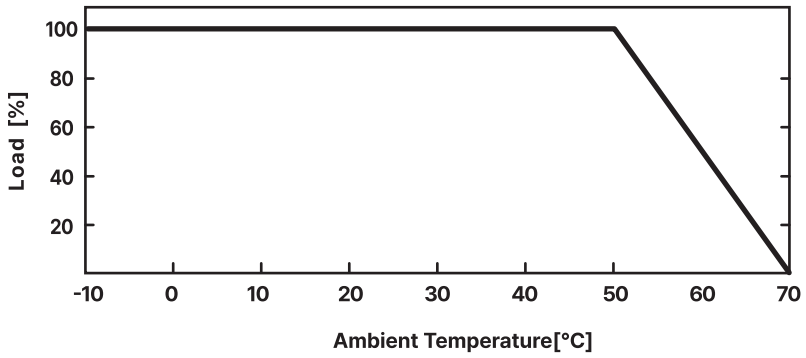

● Derating Curve For Input Voltage

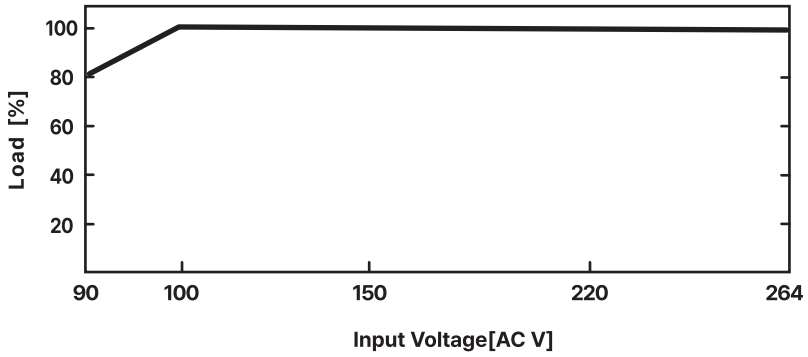

● Dimension

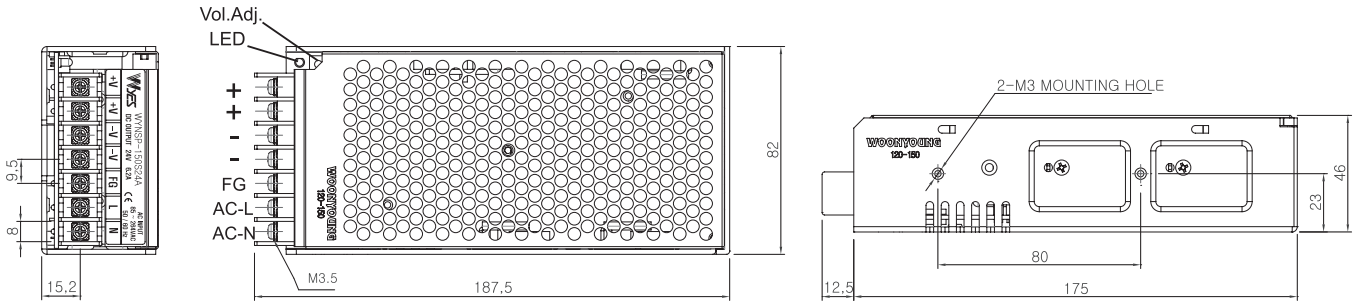

● Terminal

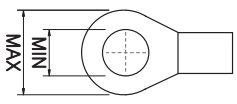

Max 7 , Min 3.5

NSP Series (역률개선용) 200W

CE RoHS

PFC Type



Features

- Input Voltage Range (AC90~264V)
- Built-in PFC
- Built-in Inrush Current Limitter
- Over Current Protection
- Over Voltage Protection
- Short Circuit Protection
- Small Size

Specifications

ITEM \ MODEL		WYNSP-200S05AP	WYNSP-200S12AP	WYNSP-200S24AP	WYNSP-200S48AP
INPUT	VOLTAGE	110VAC...3.7A / 220VAC...2.1A (Full Load) FREEVOLTAGE			
	FREQUENCY	50/60Hz (47~440Hz or DC)			
	EFFICIENCY	75% typ	75% typ	78% typ	78% typ
	INRUSHCURRENT	110VAC...14A / 220VAC...28A(Io=100%, Ta=25°C at cold start)			
	Power Factor (Io=100%)	0.97 typ			
OUTPUT CIRCUIT	VOLTAGE (V)	5	12	24	48
	CURRENT (A)	40.0	16.7	8.4	4.17
	REGULATION LINE (mV)	25Max	60Max	120Max	240Max
	REGULATION LOAD (mV)	50Max	120Max	240Max	480Max
	RIPPLE (mVp-p)	50Max	120Max	240Max	480Max
	RIPPLE NOISE (mVp-p)	100Max	170Max	290Max	530Max
	TEMPERATURE DRIFT 0 ~ 50°C (mV)	50Max	120Max	240Max	480Max
	RISE TIME (mS)	200 Max (AC IN 90V/180V Io = 100%)			
	HOLDING TIME (mS)	15 typ (AC IN 90V/ 180V Io = 100%)			
PROTECTION CIRCUIT	OVER CURRENT PROTECTION	Works at over 110% of rating and recovers automatically			
	OVER VOLTAGE PROTECTION	Works at 115 ~ 140% of rating			
ELECTRICALLY ISOLATED	INPUT-OUTPUT	AC 1,500V 1minute, DC 500V 100MΩ (At room temperature & Humidity)			
	INPUT-CASE.FG	AC 1,500V 1minute, DC 500V 100MΩ (At room temperature & Humidity)			
	OUTPUT-CASE	AC 500V 1minute, DC 500V 100MΩ (At room temperature & Humidity)			
ENVIRONMENT	OPERATING TEMP.AND HUMID	0 ~ +50°C, 20 ~ 90% RH (Non Condensing)			
	STORAGE TEMP. AND HUMID	-20 ~ +75°C, 20 ~ 90% RH (Non Condensing)			
GENERAL	COOLING	Fan cooling			
	WEIGHT (kg)	1.1			

NSP Series (역률개선용) 200W

CE RoHS

Derating Curve For Ambient

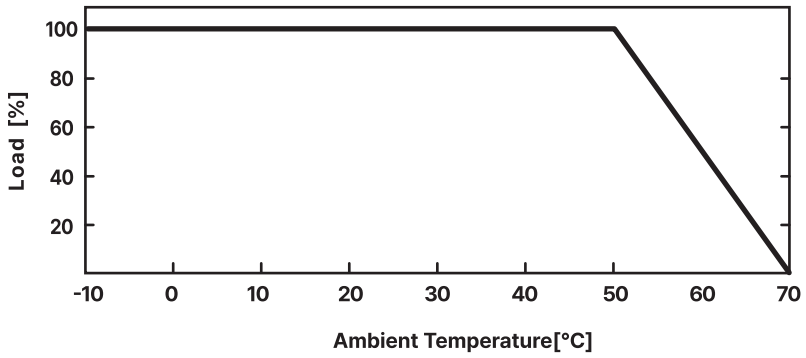

Derating Curve For Input Voltage

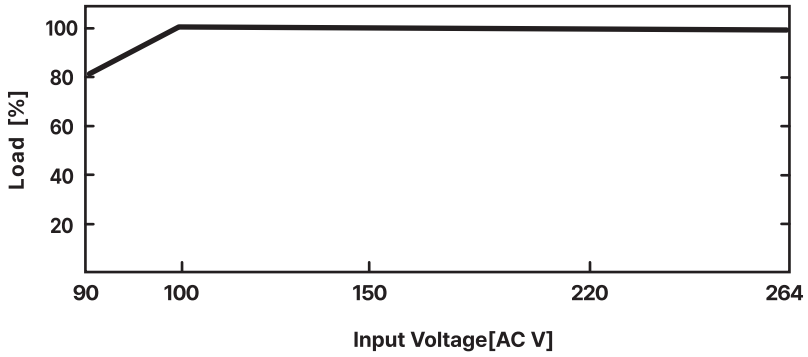

Dimension

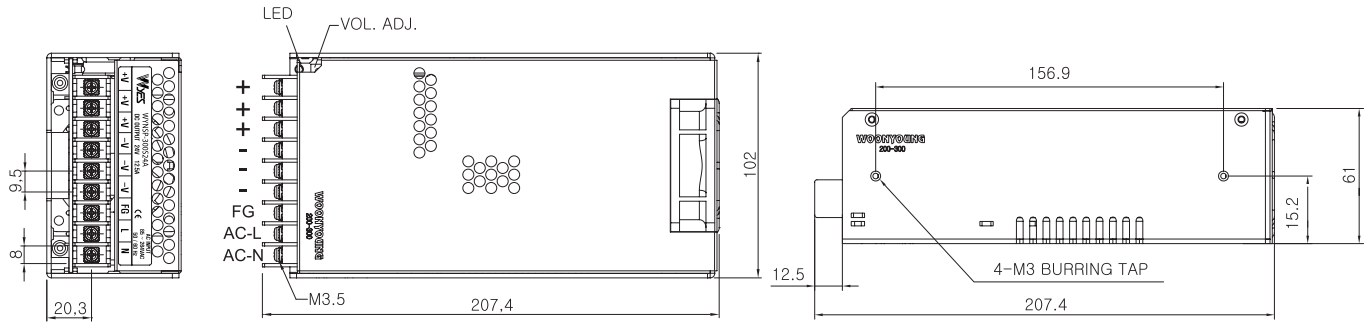

Terminal

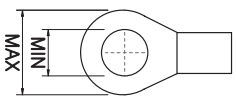

Max 7 , Min 3.5

NSP Series (역률개선용) 250W

PFC Type



Features

- Input Voltage Range (AC90~264V)
- Built-in PFC
- Built-in Inrush Current Limitter
- Over Current Protection
- Over Voltage Protection
- Short Circuit Protection
- Small Size

Specifications

ITEM \ MODEL		WYNSP-250S05AP	WYNSP-250S12AP	WYNSP-250S24AP	WYNSP-250S48AP
INPUT	VOLTAGE	110VAC...3.7A / 220VAC...2.1A (Full Load) FREEVOLTAGE			
	FREQUENCY	50/60Hz (47~440Hz or DC)			
	EFFICIENCY	75% typ	75% typ	75% typ	75% typ
	INRUSHCURRENT	110VAC...14A / 220VAC...28A(Io=100%, Ta=25°C at cold start)			
	Power Factor (Io=100%)	0.97 typ			
OUTPUT CIRCUIT	VOLTAGE (V)	5	12	24	48
	CURRENT (A)	50.8	20.8	10.4	5.2
	REGULATION LINE (mV)	60Max	75Max	120Max	240Max
	REGULATION LOAD (mV)	120Max	150Max	240Max	480Max
	RIPPLE (mVp-p)	120Max	150Max	240Max	480Max
	RIPPLE NOISE (mVp-p)	170Max	200Max	290Max	530Max
	TEMPERATURE DRIFT 0 ~ 50°C (mV)	120Max	150Max	240Max	480Max
	RISE TIME (mS)	200 Max (AC IN 90V/180V Io = 100%)			
	HOLDING TIME (mS)	15 typ (AC IN 90V/ 180V Io = 100%)			
PROTECTION CIRCUIT	OVER CURRENT PROTECTION	Works at over 110% of rating and recovers automatically			
	OVER VOLTAGE PROTECTION	Works at 115 ~ 140% of rating			
ELECTRICALLY ISOLATED	INPUT-OUTPUT	AC 1,500V 1minute, DC 500V 100MΩ (At room temperature & Humidity)			
	INPUT-CASE.FG	AC 1,500V 1minute, DC 500V 100MΩ (At room temperature & Humidity)			
	OUTPUT-CASE	AC 500V 1minute, DC 500V 100MΩ (At room temperature & Humidity)			
ENVIRONMENT	OPERATING TEMP.AND HUMID	0 ~ +50°C, 20 ~ 90% RH (Non Condensing)			
	STORAGE TEMP. AND HUMID	−20 ~ +75°C, 20 ~ 90% RH (Non Condensing)			
GENERAL	COOLING	Fan cooling			
	WEIGHT (kg)	1.1			

NSP Series (역률개선용) 250W

Derating Curve For Ambient

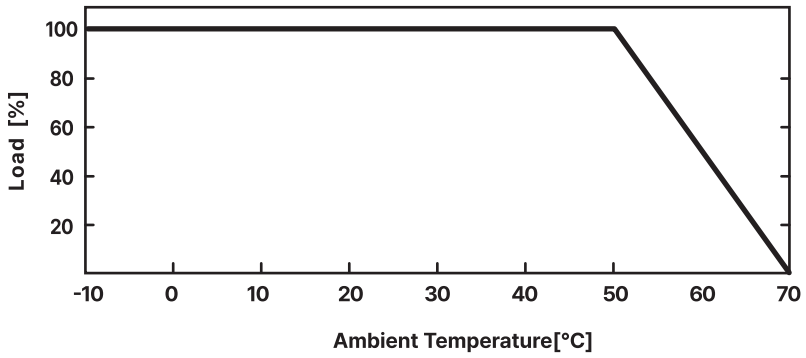

Derating Curve For Input Voltage

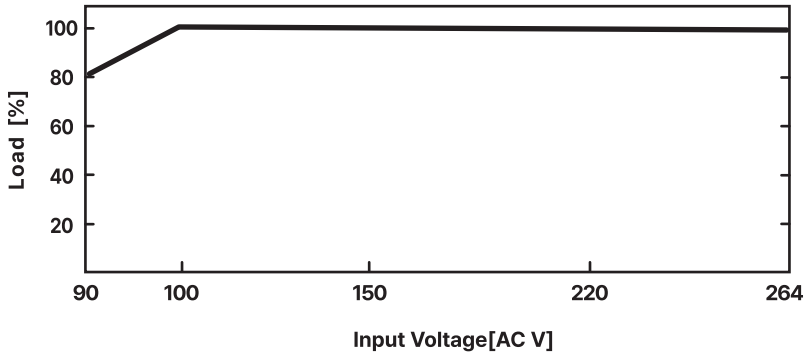

Dimension

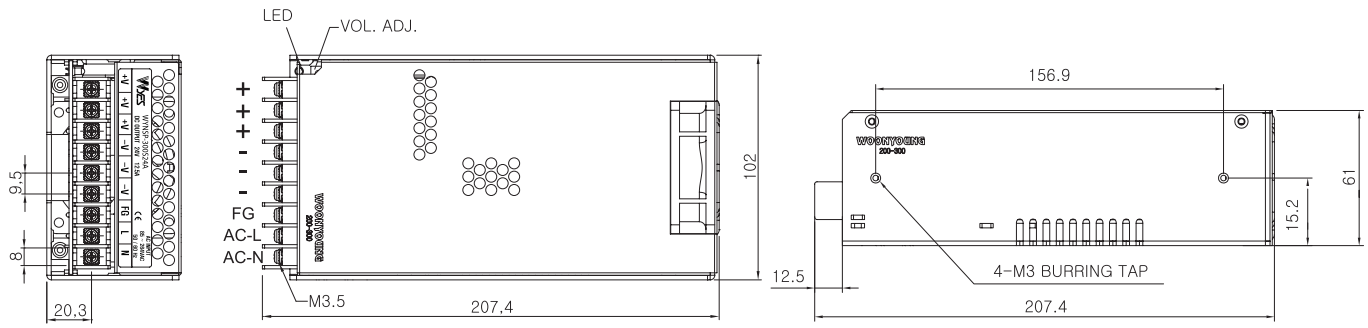

Terminal

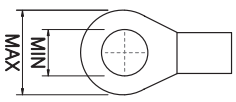

Max 7 , Min 3.5

NSP Series (역률개선용) 300W

PFC Type



Features

- Input Voltage Range (AC90~264V)
- Built-in PFC
- Built-in Inrush Current Limitter
- Over Current Protection
- Over Voltage Protection
- Short Circuit Protection
- Small Size

Specifications

ITEM \ MODEL		WYNSP-300S05AP	WYNSP-300S12AP	WYNSP-300S24AP	WYNSP-300S48AP
INPUT	VOLTAGE	110VAC...7.0A / 220VAC...3.5A (Full Load) FREEVOLTAGE			
	FREQUENCY	50/60Hz (47~440Hz or DC)			
	EFFICIENCY	75% typ	75% typ	80% typ	80% typ
	INRUSHCURRENT	110VAC...25A / 220VAC...50A(Io=100%, Ta=25°C at cold start)			
	Power Factor (Io=100%)	0.97 typ			
OUTPUT CIRCUIT	VOLTAGE (V)	5	12	24	48
	CURRENT (A)	60.0	25.0	12.5	6.3
	REGULATION LINE (mV)	25Max	60Max	120Max	240Max
	REGULATION LOAD (mV)	50Max	120Max	240Max	480Max
	RIPPLE (mVp-p)	50Max	120Max	240Max	480Max
	RIPPLE NOISE (mVp-p)	100Max	170Max	290Max	530Max
	TEMPERATURE DRIFT 0 ~ 50°C (mV)	50Max	120Max	240Max	480Max
	RISE TIME (mS)	300 Max (AC IN 90V/180V Io = 100%)			
	HOLDING TIME (mS)	20 typ (AC IN 90V/ 180V Io = 100%)			
PROTECTION CIRCUIT	OVER CURRENT PROTECTION	Works at over 110% of rating and recovers automatically			
	OVER VOLTAGE PROTECTION	Works at 115 ~ 140% of rating			
ELECTRICALLY ISOLATED	INPUT-OUTPUT	AC 1,500V 1minute, DC 500V 100MΩ (At room temperature & Humidity)			
	INPUT-CASE.FG	AC 1,500V 1minute, DC 500V 100MΩ (At room temperature & Humidity)			
	OUTPUT-CASE	AC 500V 1minute, DC 500V 100MΩ (At room temperature & Humidity)			
ENVIRONMENT	OPERATING TEMP.AND HUMID	0 ~ +50°C, 20 ~ 90% RH (Non Condensing)			
	STORAGE TEMP. AND HUMID	−20 ~ +75°C, 20 ~ 90% RH (Non Condensing)			
GENERAL	COOLING	Fan cooling			
	WEIGHT (kg)	1.1			

NSP Series (역률개선용) 300W

Derating Curve For Ambient

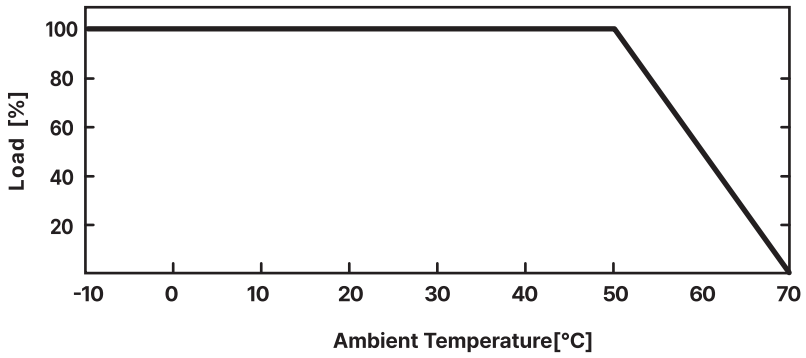

Derating Curve For Input Voltage

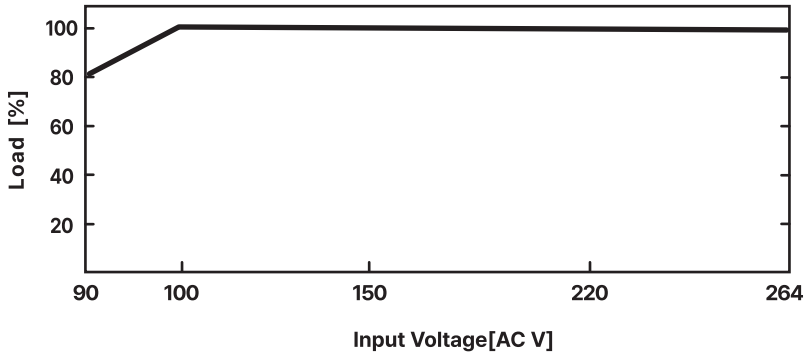

Dimension

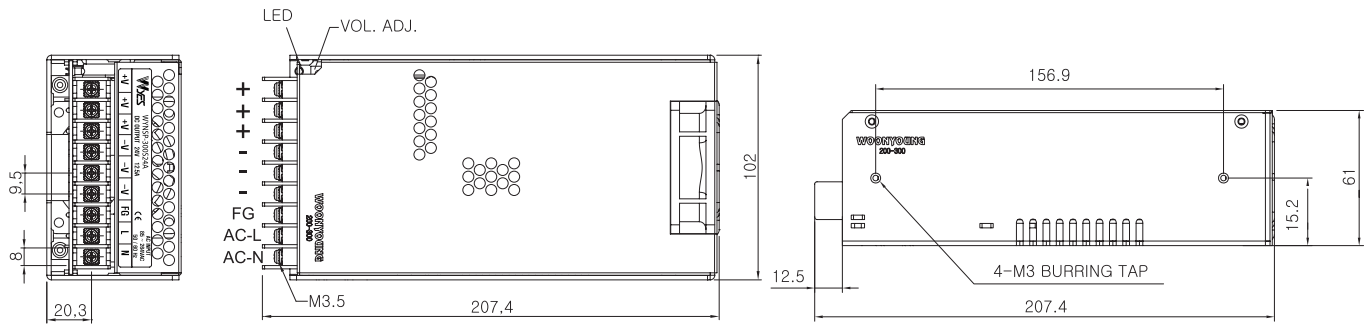

Terminal

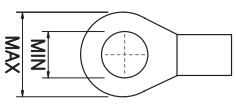

Max 7 , Min 3.5

SP Series 10W , 15W

CE RoHS

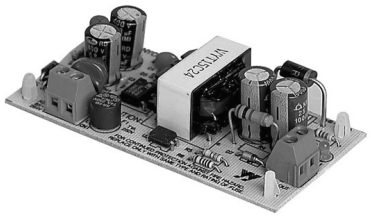

Features

- Input Voltage Range (AC90－264V)
- Built－in Inrush Current Limitter
- Over Current Protection
- Short Circuit Protection
- Over Temperature Protection
- Auto－Restart Mode

Specifications

ITEM \ MODEL		WYSP－10S05P	WYSP－15S12P	WYSP－15S24P
INPUT	VOLTAGE	110VAC...0.4A / 220VAC.....0.2A(Full Load) FREE VOLTAGE		
	FREQUENCY	50/60Hz (47～440Hz or DC)		
	EFFICIENCY	70% typ	75% typ	
	INRUSHCURRENT	110VAC....3.5A / 220VAC....6A(Io=100%, Ta=25°C at cold start)		
OUTPUT CIRCUIT	VOLTAGE (V)	5	12	24
	CURRENT (A)	2.0	1.25	0.63
	REGULATION LINE (mV)	25Max	50Max	75Max
	REGULATION LOAD (mV)	50Max	100Max	150Max
	RIPPLE (mVp－p)	50Max	100Max	150Max
	RIPPLE NOISE (mVp－p)	100Max	170Max	200Max
	TEMPERATURE DRIFT 0 ～ 50°C (mV)	50Max	100Max	150Max
	RISE TIME (mS)	100Max (AC IN 85V Io=100%)		
	HOLDING TIME (mS)	15typ (AC IN 85V Io=100%)		
PROTECTION CIRCUIT	OVER CURRENT PROTECTION	Works at over 110% of rating and recovers automatically		
	OVER VOLTAGE PROTECTION	–		
ELECTRICALLY ISOLATED	INPUT－OUTPUT	AC 1,500V 1minute, DC 500V 100MΩ (At room temperature & Humidity)		
	INPUT－CASE.FG	AC 1,500V 1minute, DC 500V 100MΩ (At room temperature & Humidity)		
	OUTPUT－CASE	AC 500V 1minute, DC 500V 100MΩ (At room temperature & Humidity)		
ENVIRONMENT	OPERATING TEMP.AND HUMID	0 ～ +50°C, 20 ～ 90% RH (Non Condensing)		
	STORAGE TEMP. AND HUMID	−20 ～ +75°C, 20 ～ 90% RH (Non Condensing)		
GENERAL	COOLING	Natural cooling		
	WEIGHT (kg)	0.2		

Derating Curve For Ambient

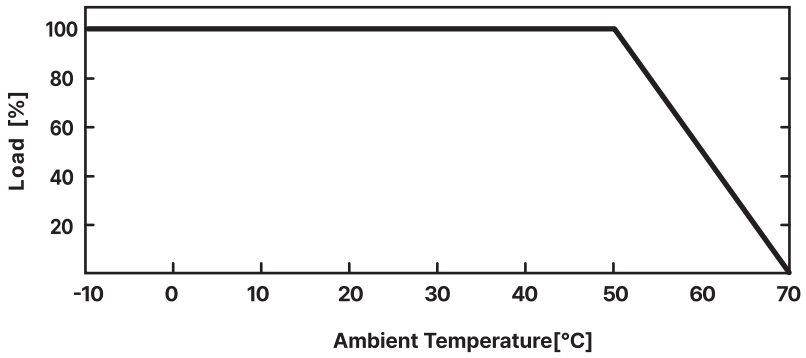

Derating Curve For Input Voltage

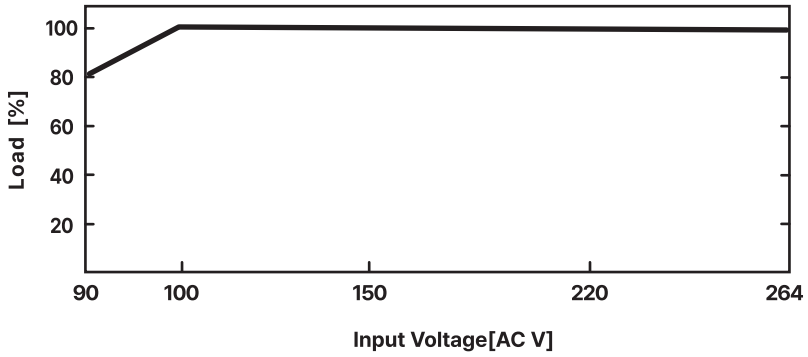

Dimension

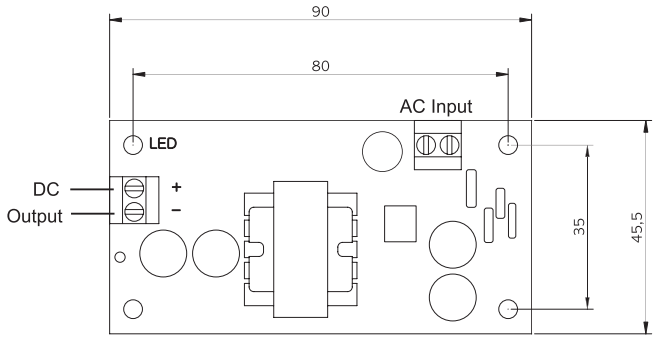

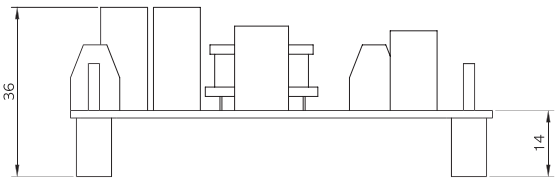

SP Series 30W

CE RoHS

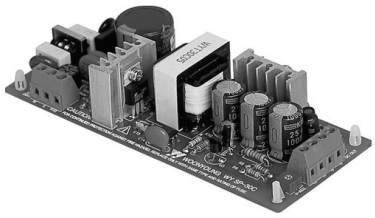

Features

- Input Voltage Range (AC90－264V)
- Built－in Inrush Current Limitter
- Over Current Protection
- Short Circuit Protection
- Over Temperature Protection
- Auto－Restart Mode

Specifications

ITEM \ MODEL		WYSP－30S05P	WYSP－30S12P	WYSP－30S24P
INPUT	VOLTAGE	110VAC...0.4A / 220VAC.....0.2A(Full Load) FREE VOLTAGE		
	FREQUENCY	50/60Hz (47～440Hz or DC)		
	EFFICIENCY	70% typ	75% typ	
	INRUSHCURRENT	110VAC....3.5A / 220VAC....6A(Io=100%, Ta=25°C at cold start)		
OUTPUT CIRCUIT	VOLTAGE (V)	5	12	24
	CURRENT (A)	6.0	2.5	1.3
	REGULATION LINE (mV)	25Max	50Max	75Max
	REGULATION LOAD (mV)	50Max	100Max	150Max
	RIPPLE (mVp-p)	50Max	100Max	150Max
	RIPPLE NOISE (mVp-p)	100Max	170Max	200Max
	TEMPERATURE DRIFT 0 ～ 50°C (mV)	50Max	100Max	150Max
	RISE TIME (mS)	100Max (AC IN 85V Io=100%)		
	HOLDING TIME (mS)	15typ (AC IN 85V Io=100%)		
PROTECTION CIRCUIT	OVER CURRENT PROTECTION	Works at over 110% of rating and recovers automatically		
	OVER VOLTAGE PROTECTION	–		
ELECTRICALLY ISOLATED	INPUT－OUTPUT	AC 1,500V 1minute, DC 500V 100MΩ (At room temperature & Humidity)		
	INPUT－CASE.FG	AC 1,500V 1minute, DC 500V 100MΩ (At room temperature & Humidity)		
	OUTPUT－CASE	AC 500V 1minute, DC 500V 100MΩ (At room temperature & Humidity)		
ENVIRONMENT	OPERATING TEMP.AND HUMID	0 ～ +50°C, 20 ～ 90% RH (Non Condensing)		
	STORAGE TEMP. AND HUMID	−20 ~ +75°C, 20 ～ 90% RH (Non Condensing)		
GENERAL	COOLING	Natural cooling		
	WEIGHT (kg)	0.2		

Derating Curve For Ambient

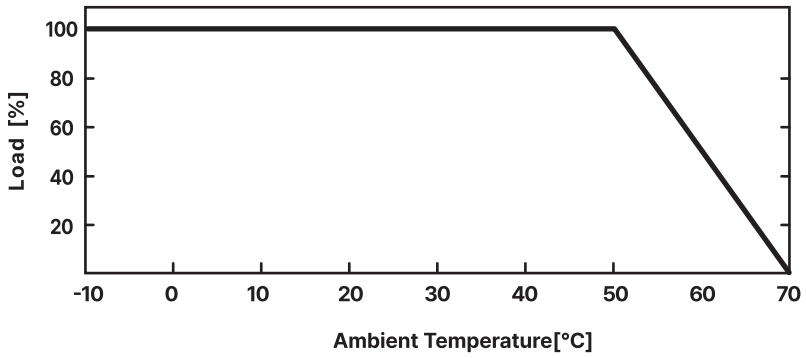

Derating Curve For Input Voltage

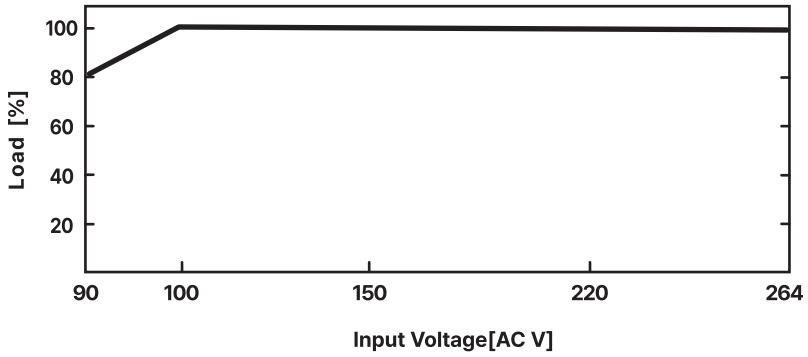

Dimension

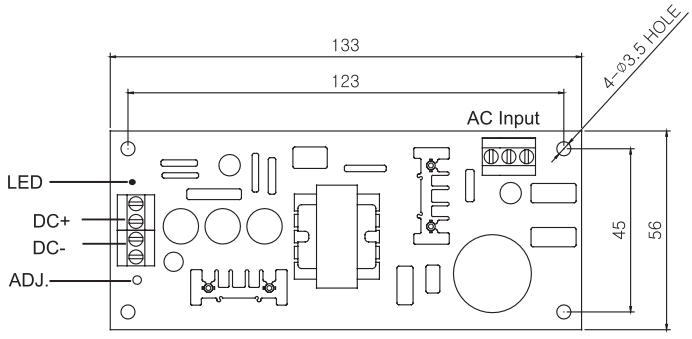

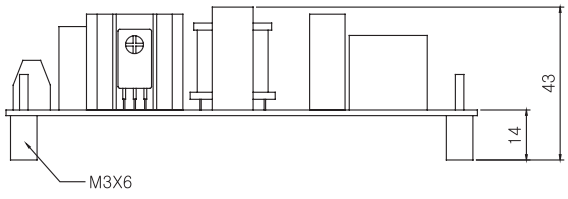

SP Series 15W

CE RoHS



Features

- Input Voltage Range (AC90－264V)
- Built－in Inrush Current Limitter
- Over Current Protection
- Short Circuit Protection
- Over Temperature Protection
- Auto－Restart Mode

Specifications

ITEM \ MODEL		WYSP－15S05B	WYSP－15S09B	WYSP－15S12B	WYSP－15S15B	WYSP－15S24B	WYSP－15S48B
INPUT	VOLTAGE	110VAC...0.4A / 220VAC.....0.2A(Full Load) FREE VOLTAGE					
	FREQUENCY	50/60Hz (47～440Hz or DC)					
	EFFICIENCY	70% typ	70% typ	75% typ	75% typ	78% typ	78% typ
	INRUSHCURRENT	110VAC....4.5A / 220VAC....9A(Io=100%, Ta=25°C at cold start)					
OUTPUT CIRCUIT	VOLTAGE (V)	5	9	12	15	24	48
	CURRENT (A)	3.0	1.7	1.3	1.0	0.7	0.3
	REGULATION LINE (mV)	25Max	45Max	60Max	75Max	120Max	240Max
	REGULATION LOAD (mV)	50Max	90Max	120Max	150Max	240Max	480Max
	RIPPLE (mVp－p)	50Max	90Max	120Max	150Max	240Max	480Max
	RIPPLE NOISE (mVp－p)	100Max	140Max	170Max	200Max	290Max	530Max
	TEMPERATURE DRIFT 0 ～ 50°C (mV)	50Max	90Max	120Max	150Max	240Max	480Max
	RISE TIME (mS)	100Max (AC IN 85V Io=100%)					
	HOLDING TIME (mS)	15typ (AC IN 85V Io=100%)					
PROTECTION CIRCUIT	OVER CURRENT PROTECTION	Works at over 110% of rating and recovers automatically					
	OVER VOLTAGE PROTECTION	–					
ELECTRICALLY ISOLATED	INPUT－OUTPUT	AC 1,500V 1minute, DC 500V 100MΩ (At room temperature & Humidity)					
	INPUT－CASE.FG	AC 1,500V 1minute, DC 500V 100MΩ (At room temperature & Humidity)					
	OUTPUT－CASE	AC 500V 1minute, DC 500V 100MΩ (At room temperature & Humidity)					
ENVIRONMENT	OPERATING TEMP.AND HUMID	0 ～ +50°C, 20 ～ 90% RH (Non Condensing)					
	STORAGE TEMP. AND HUMID	−20 ～ +75°C, 20 ～ 90% RH (Non Condensing)					
GENERAL	COOLING	Natural cooling					
	WEIGHT (kg)	0.3					

Derating Curve For Ambient

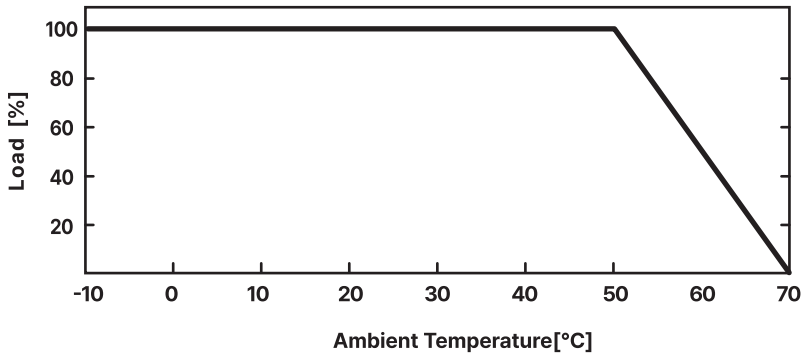

Derating Curve For Input Voltage

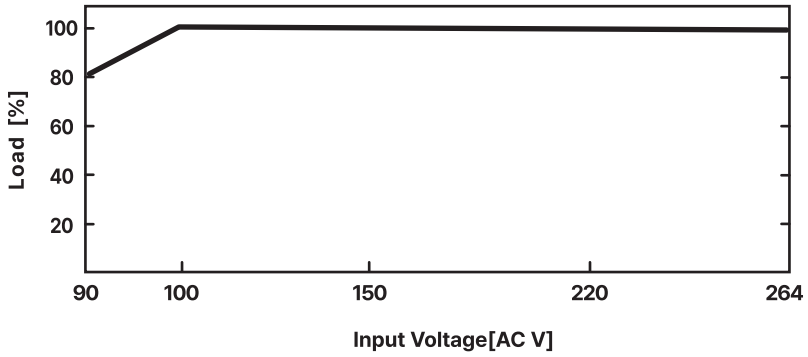

Dimension

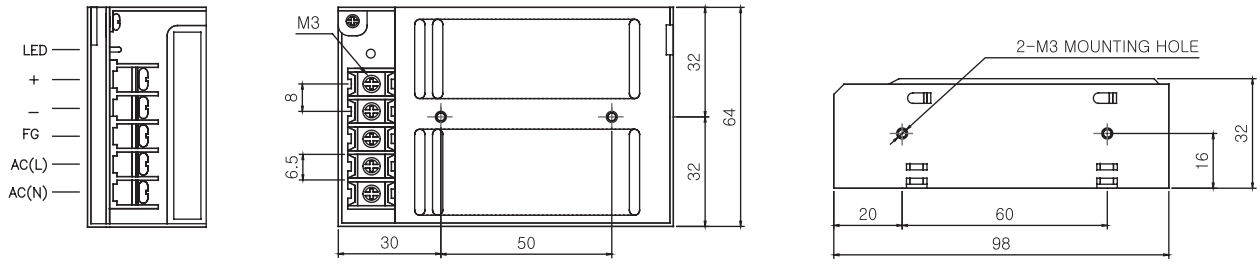

Terminal

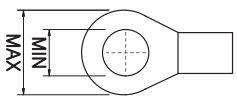

Max 6 , Min 3

SP Series 30W

1CH-30W CE RoHS



Features

- Input Voltage Range (AC90－264V)
- Built－in Inrush Current Limitter
- Over Current Protection
- Short Circuit Protection
- Over Temperature Protection
- Auto－Restart Mode

Specifications

ITEM \ MODEL		WYSP－30S05B	WYSP－30S09B	WYSP－30S12B	WYSP－30S15B	WYSP－30S24B	WYSP－30S48B
INPUT	VOLTAGE	110VAC...0.8A / 220VAC.....0.4A(Full Load) FREE VOLTAGE					
	FREQUENCY	50/60Hz (47～440Hz or DC)					
	EFFICIENCY	70% typ	70% typ	75% typ	75% typ	78% typ	78% typ
	INRUSHCURRENT	110VAC....4.5A / 220VAC....9A(Io=100%, Ta=25°C at cold start)					
OUTPUT CIRCUIT	VOLTAGE (V)	5	9	12	15	24	48
	CURRENT (A)	6.0	3.4	2.5	2.0	1.3	0.6
	REGULATION LINE (mV)	25Max	45Max	60Max	75Max	120Max	240Max
	REGULATION LOAD (mV)	50Max	90Max	120Max	150Max	240Max	480Max
	RIPPLE (mVp-p)	50Max	90Max	120Max	150Max	240Max	480Max
	RIPPLE NOISE (mVp-p)	100Max	140Max	170Max	200Max	290Max	530Max
	TEMPERATURE DRIFT 0 ～ 50°C (mV)	50Max	90Max	120Max	150Max	240Max	480Max
	RISE TIME (mS)	nn100Max (AC IN 85V Io=100%)					
	HOLDING TIME (mS)	15typ (AC IN 85V Io=100%)					
PROTECTION CIRCUIT	OVER CURRENT PROTECTION	Works at over 110% of rating and recovers automatically					
	OVER VOLTAGE PROTECTION	–					
ELECTRICALLY ISOLATED	INPUT－OUTPUT	AC 1,500V 1minute, DC 500V 100MΩ (At room temperature & Humidity)					
	INPUT－CASE.FG	AC 1,500V 1minute, DC 500V 100MΩ (At room temperature & Humidity)					
	OUTPUT－CASE	AC 500V 1minute, DC 500V 100MΩ (At room temperature & Humidity)					
ENVIRONMENT	OPERATING TEMP.AND HUMID	0 ～ +50°C, 20 ～ 90% RH (Non Condensing)					
	STORAGE TEMP. AND HUMID	−20 ～ +75°C, 20 ～ 90% RH (Non Condensing)					
GENERAL	COOLING	Natural cooling					
	WEIGHT (kg)	0.3					

SP Series 30W

1CH-30W CE RoHS

Derating Curve For Ambient

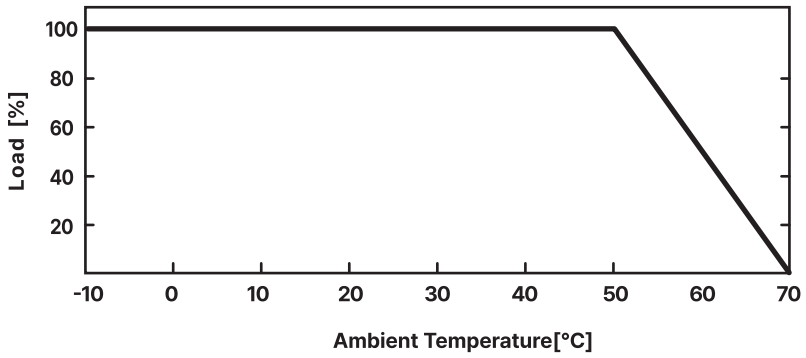

Derating Curve For Input Voltage

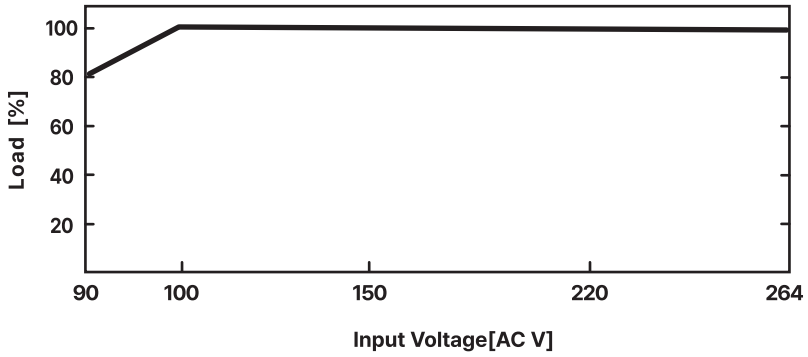

Dimension

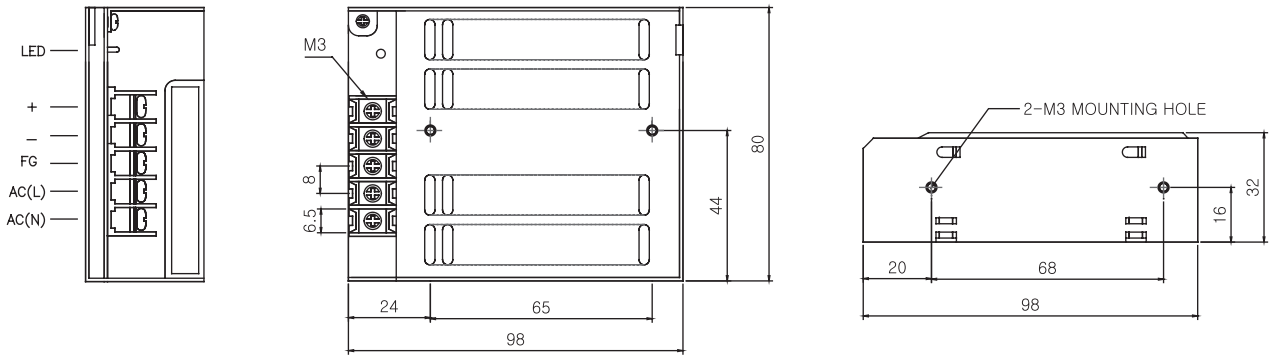

Terminal

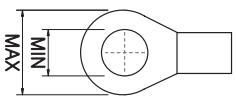

Max 6 , Min 3

SP Series 50W

CE RoHS



Features

- Input Voltage Range (AC90-264V)
- Built-in Inrush Current Limitter
- Over Current Protection
- Short Circuit Protection
- Over Temperature Protection
- Auto-Restart Mode

Specifications

ITEM \ MODEL		WYSP－50S05B	WYSP－50S09B	WYSP－50S12B	WYSP－50S15B	WYSP－50S24B	WYSP－50S48B
INPUT	VOLTAGE	110VAC...1.2A / 220VAC.....0.6A(Full Load) FREE VOLTAGE					
	FREQUENCY	50/60Hz (47～440Hz or DC)					
	EFFICIENCY	70% typ	70% typ	75% typ	75% typ	78% typ	78% typ
	INRUSHCURRENT	110VAC....6.8A / 220VAC....13.5A(Io=100%, Ta=25°C at cold start)					
OUTPUT CIRCUIT	VOLTAGE (V)	5	9	12	15	24	48
	CURRENT (A)	10.0	5.6	4.2	3.4	2.1	1.1
	REGULATION LINE (mV)	25Max	45Max	60Max	75Max	120Max	240Max
	REGULATION LOAD (mV)	50Max	90Max	120Max	150Max	240Max	480Max
	RIPPLE (mVp－p)	50Max	90Max	120Max	150Max	240Max	480Max
	RIPPLE NOISE (mVp－p)	100Max	140Max	170Max	200Max	290Max	530Max
	TEMPERATURE DRIFT 0 ～ 50°C (mV)	50Max	90Max	120Max	150Max	240Max	480Max
	RISE TIME (mS)	100Max (AC IN 85V Io=100%)					
	HOLDING TIME (mS)	15typ (AC IN 85V Io=100%)					
PROTECTION CIRCUIT	OVER CURRENT PROTECTION	Works at over 110% of rating and recovers automatically					
	OVER VOLTAGE PROTECTION	–					
ELECTRICALLY ISOLATED	INPUT－OUTPUT	AC 1,500V 1minute, DC 500V 100MΩ (At room temperature & Humidity)					
	INPUT－CASE.FG	AC 1,500V 1minute, DC 500V 100MΩ (At room temperature & Humidity)					
	OUTPUT－CASE	AC 500V 1minute, DC 500V 100MΩ (At room temperature & Humidity)					
ENVIRONMENT	OPERATING TEMP.AND HUMID	0 ～ +50°C, 20 ～ 90% RH (Non Condensing)					
	STORAGE TEMP. AND HUMID	−20 ～ +75°C, 20 ～ 90% RH (Non Condensing)					
GENERAL	COOLING	Natural cooling					
	WEIGHT (kg)	0.4					

Derating Curve For Ambient

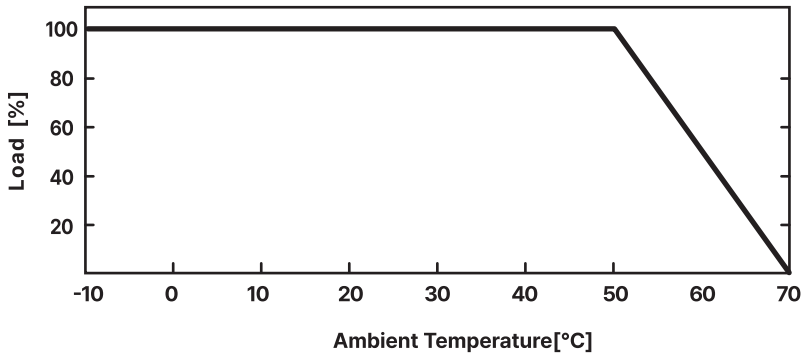

Derating Curve For Input Voltage

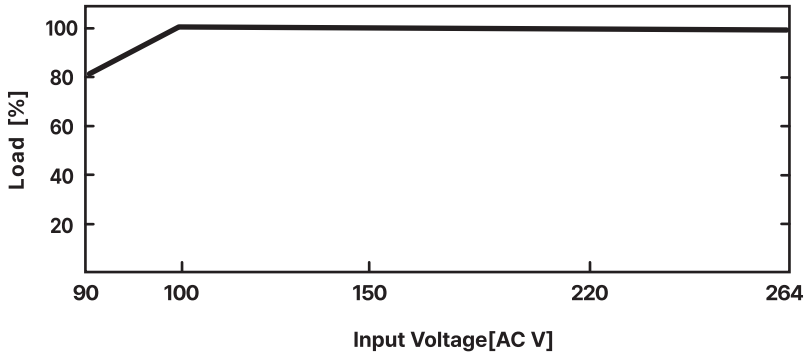

Dimension

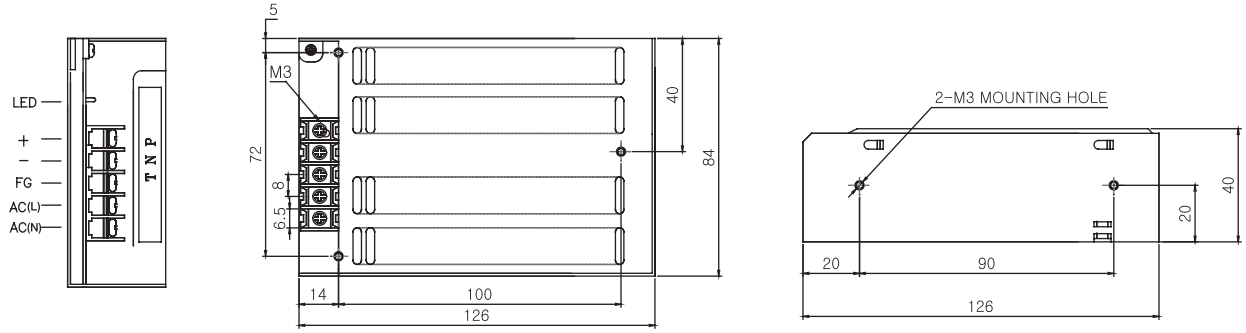

Terminal

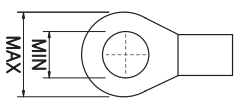

Max 6 , Min 3

SP Series 75W

CE RoHS



Features

- Input Voltage Range (AC90－264V)
- Built－in Inrush Current Limitter
- Over Current Protection
- Over Voltage Protection
- Short Circuit Protection
- Over Temperature Protection
- Auto－Restart Mode

Specifications

ITEM \ MODEL		WYSP－75S05B	WYSP－75S12B	WYSP－75S15B	WYSP－75S24B	WYSP－75S48B
INPUT	VOLTAGE	110VAC...1.6A / 220VAC.....0.8A(Full Load) FREE VOLTAGE				
	FREQUENCY	50/60Hz (47～440Hz or DC)				
	EFFICIENCY	70% typ	70% typ	75% typ	78% typ	78% typ
	INRUSHCURRENT	110VAC....6.8A / 220VAC....13.5A(Io=100%, Ta=25°C at cold start)				
OUTPUT CIRCUIT	VOLTAGE (V)	5	12	15	24	48
	CURRENT (A)	12(110VAC),15(220VAC)	6.3	5.0	3.2	1.6
	REGULATION LINE (mV)	25Max	60Max	75Max	120Max	240Max
	REGULATION LOAD (mV)	50Max	120Max	150Max	240Max	480Max
	RIPPLE (mVp－p)	50Max	120Max	150Max	240Max	480Max
	RIPPLE NOISE (mVp－p)	100Max	170Max	200Max	290Max	530Max
	TEMPERATURE DRIFT 0 ～ 50°C (mV)	50Max	120Max	150Max	240Max	480Max
	RISE TIME (mS)	100Max (AC IN 90V/180V Io=100%)				
	HOLDING TIME (mS)	15typ (AC IN 90V/180V Io=100%)				
PROTECTION CIRCUIT	OVER CURRENT PROTECTION	Works at over 110% of rating and recovers automatically				
	OVER VOLTAGE PROTECTION	Works at 115～140% of rating				
ELECTRICALLY ISOLATED	INPUT－OUTPUT	AC 1,500V 1minute, DC 500V 100MΩ (At room temperature & Humidity)				
	INPUT－CASE.FG	AC 1,500V 1minute, DC 500V 100MΩ (At room temperature & Humidity)				
	OUTPUT－CASE	AC 500V 1minute, DC 500V 100MΩ (At room temperature & Humidity)				
ENVIRONMENT	OPERATING TEMP.AND HUMID	0 ～ +50°C, 20 ～ 90% RH (Non Condensing)				
	STORAGE TEMP. AND HUMID	−20 ～ +75°C, 20 ～ 90% RH (Non Condensing)				
GENERAL	COOLING	Natural cooling				
	WEIGHT (kg)	0.5				

Derating Curve For Ambient

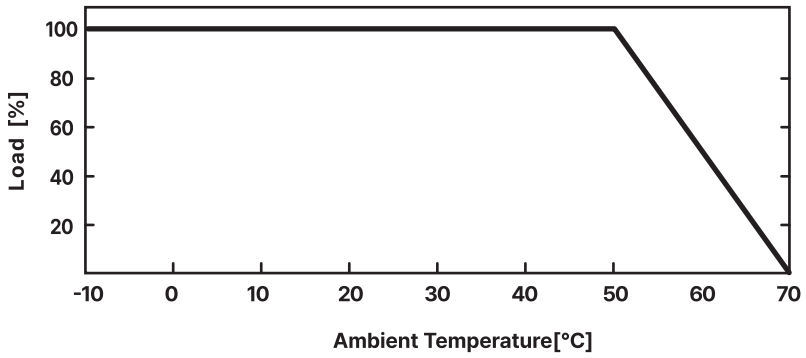

Derating Curve For Input Voltage

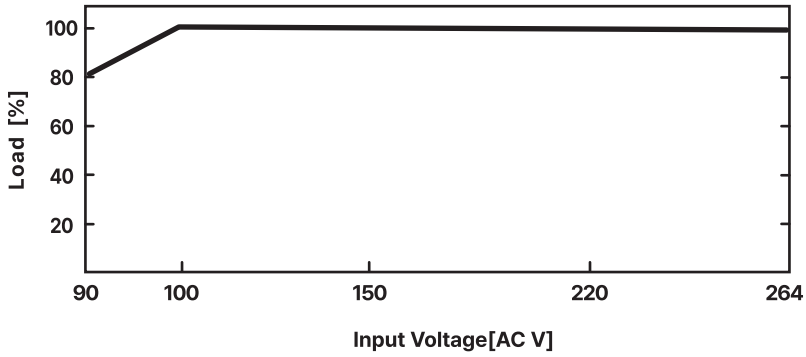

Dimension

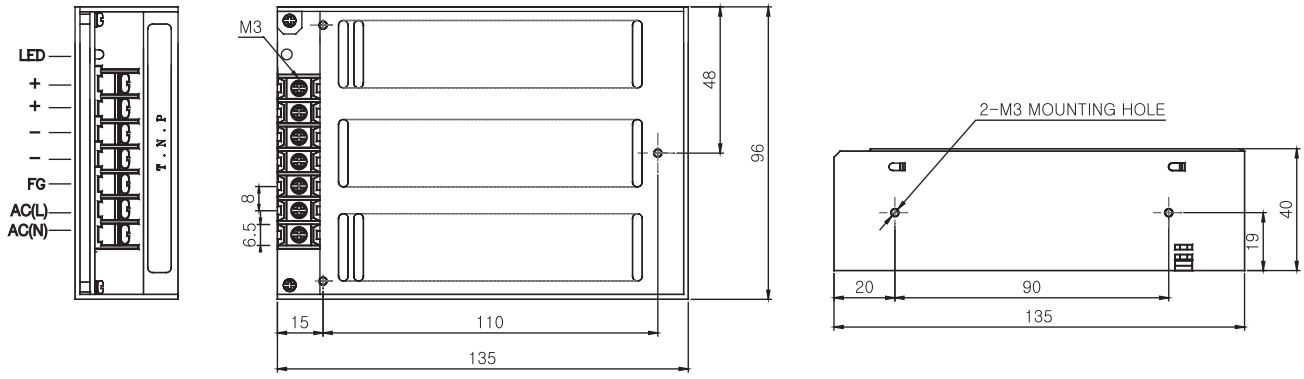

Terminal

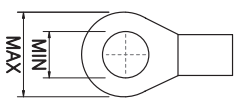

Max 6 , Min 3

SP Series 100W

CE RoHS



Features

- Dual Input Voltage Range (AC90－132 / AC170－264)
- Built－in Inrush Current Limitter
- Over Current Protection
- Over Voltage Protection
- Short Circuit Protection
- Remote Sensing

Specifications

ITEM \ MODEL		WYSP－100S05A	WYSP－100S12A	WYSP－100S15A	WYSP－100S24A	WYSP－100S48A
INPUT	VOLTAGE	110VAC...2.5A / 220VAC.....1.4A(Full Load)				
	FREQUENCY	50/60Hz (47～440Hz or DC)				
	EFFICIENCY	70% typ	70% typ	75% typ	75% typ	75% typ
	INRUSHCURRENT	110VAC....14A / 220VAC....28A(Io=100%, Ta=25°C at cold start)				
OUTPUT CIRCUIT	VOLTAGE (V)	5	12	15	24	48
	CURRENT (A)	20.0	8.4	6.7	4.2	2.1
	REGULATION LINE (mV)	25Max	60Max	75Max	120Max	240Max
	REGULATION LOAD (mV)	50Max	120Max	150Max	240Max	480Max
	RIPPLE (mVp－p)	50Max	120Max	150Max	240Max	480Max
	RIPPLE NOISE (mVp－p)	100Max	170Max	200Max	290Max	530Max
	TEMPERATURE DRIFT 0 ～ 50°C (mV)	50Max	120Max	150Max	240Max	480Max
	RISE TIME (mS)	100Max (AC IN 90V/180V Io=100%)				
	HOLDING TIME (mS)	15typ (AC IN 90V/180V Io=100%)				
PROTECTION CIRCUIT	OVER CURRENT PROTECTION	Works at over 110% of rating and recovers automatically				
	OVER VOLTAGE PROTECTION	Works at 115～140% of rating				
ELECTRICALLY ISOLATED	INPUT－OUTPUT	AC 1,500V 1minute, DC 500V 100MΩ (At room temperature & Humidity)				
	INPUT－CASE.FG	AC 1,500V 1minute, DC 500V 100MΩ (At room temperature & Humidity)				
	OUTPUT－CASE	AC 500V 1minute, DC 500V 100MΩ (At room temperature & Humidity)				
ENVIRONMENT	OPERATING TEMP.AND HUMID	0 ～ +50°C, 20 ～ 90% RH (Non Condensing)				
	STORAGE TEMP. AND HUMID	−20 ～ +75°C, 20 ～ 90% RH (Non Condensing)				
GENERAL	COOLING	Natural cooling				
	FUNCTION	V. Sensor				
	WEIGHT (kg)	0.9				

Derating Curve For Ambient

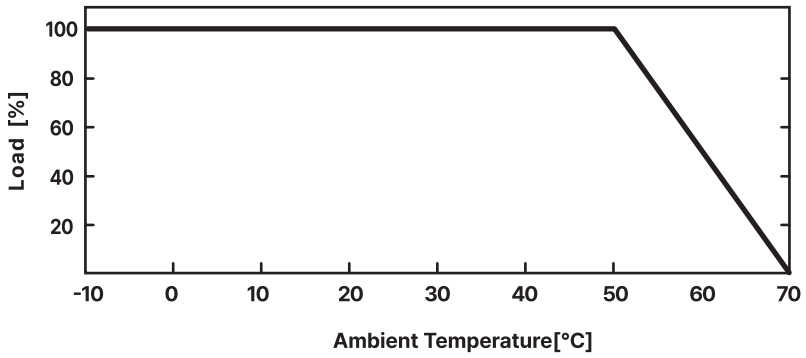

Derating Curve For Input Voltage

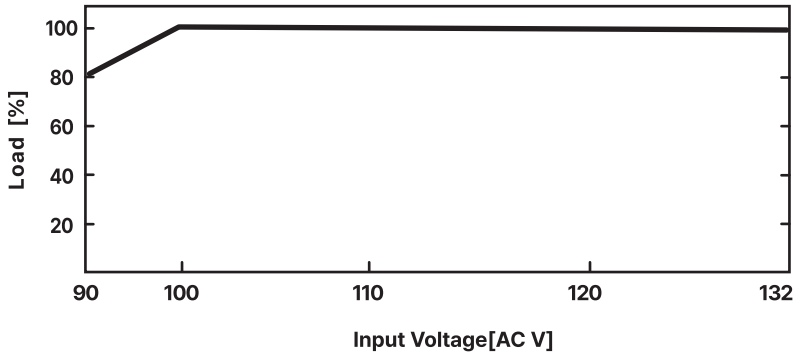

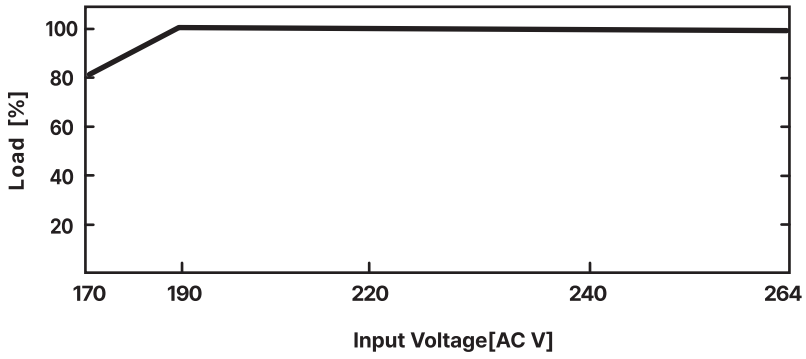

Terminal

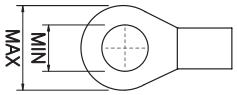

Max 6 , Min 3

Dimension

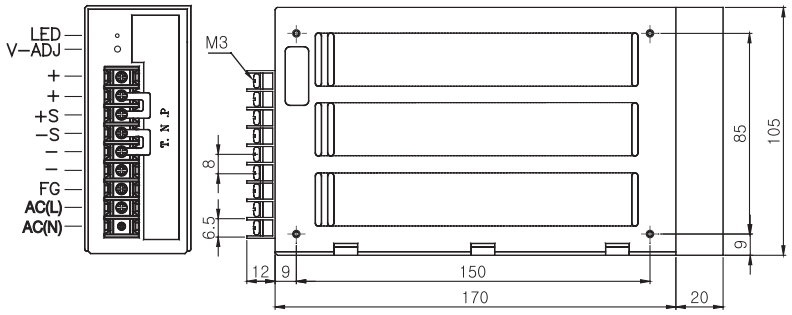

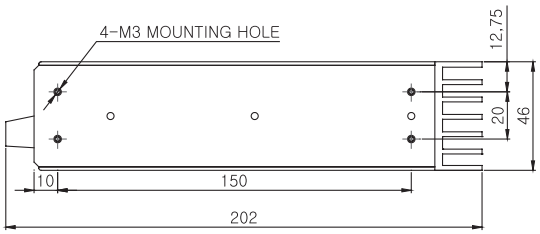

SP Series 120W

CE RoHS



Features

- Dual Input Voltage Range (AC90－132 / AC170－264)
- Built－in Inrush Current Limitter
- Over Current Protection
- Over Voltage Protection
- Short Circuit Protection
- Remote Sensing

Specifications

ITEM \ MODEL		WYSP－120S05A	WYSP－120S12A	WYSP－120S15A	WYSP－120S24A	WYSP－120S48A
INPUT	VOLTAGE	110VAC...3.0A / 220VAC.....1.5A(Full Load)				
	FREQUENCY	50/60Hz (47～440Hz or DC)				
	EFFICIENCY	75% typ	75% typ	75% typ	75% typ	75% typ
	INRUSHCURRENT	110VAC....14A / 220VAC....28A (Io=100%, Ta=25°C at cold start)				
OUTPUT CIRCUIT	VOLTAGE (V)	5	12	15	24	48
	CURRENT (A)	24.0	10.0	8.0	5.0	2.5
	REGULATION LINE (mV)	25Max	60Max	75Max	120Max	240Max
	REGULATION LOAD (mV)	50Max	120Max	150Max	240Max	480Max
	RIPPLE (mVp－p)	50Max	120Max	150Max	240Max	480Max
	RIPPLE NOISE (mVp－p)	100Max	170Max	200Max	290Max	530Max
	TEMPERATURE DRIFT 0 ～ 50°C (mV)	50Max	120Max	150Max	240Max	480Max
	RISE TIME (mS)	100Max (AC IN 90V/180V Io=100%)				
	HOLDING TIME (mS)	15typ (AC IN 90V/180V Io=100%)				
PROTECTION CIRCUIT	OVER CURRENT PROTECTION	Works at over 110% of rating and recovers automatically				
	OVER VOLTAGE PROTECTION	Works at 115～140% of rating				
ELECTRICALLY ISOLATED	INPUT－OUTPUT	AC 1,500V 1minute, DC 500V 100MΩ (At room temperature & Humidity)				
	INPUT－CASE.FG	AC 1,500V 1minute, DC 500V 100MΩ (At room temperature & Humidity)				
	OUTPUT－CASE	AC 500V 1minute, DC 500V 100MΩ (At room temperature & Humidity)				
ENVIRONMENT	OPERATING TEMP.AND HUMID	0 ～ +50°C, 20 ～ 90% RH (Non Condensing)				
	STORAGE TEMP. AND HUMID	−20 ～ +75°C, 20 ～ 90% RH (Non Condensing)				
GENERAL	COOLING	Natural cooling				
	FUNCTION	V. Sensor				
	WEIGHT (kg)	0.9				

Derating Curve For Ambient

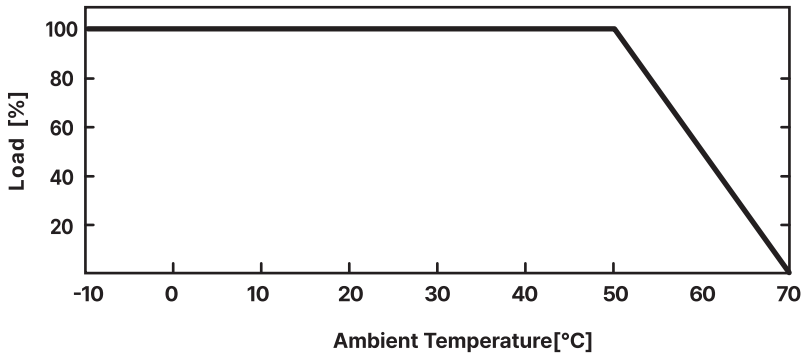

Derating Curve For Input Voltage

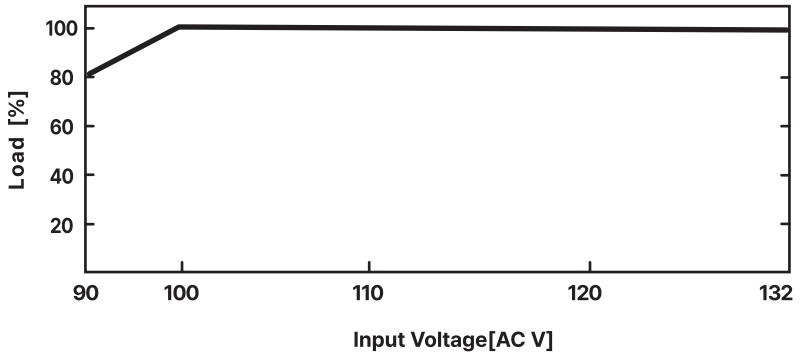

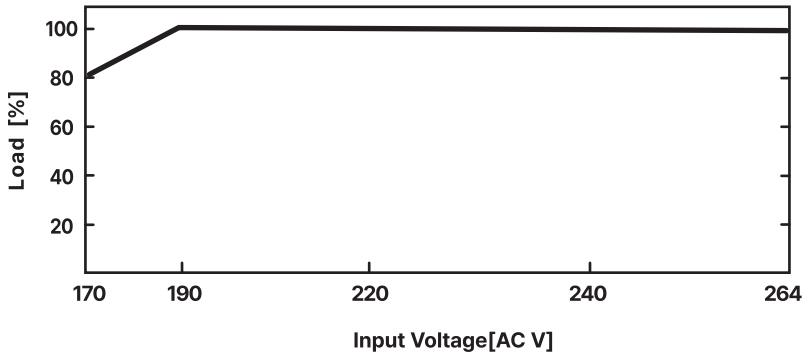

Terminal

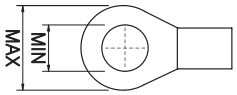

Max 6 , Min 3

Dimension

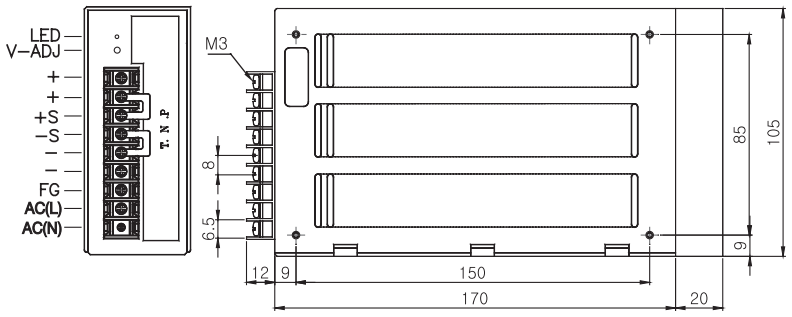

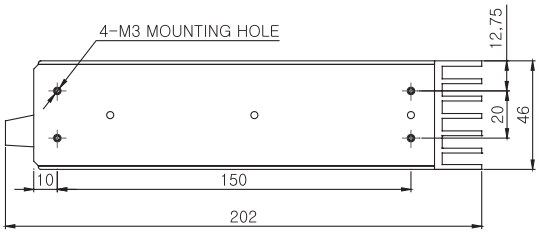

SP Series 150W

CE RoHS



Features

- Dual Input Voltage Range (AC90－132 / AC170－264)
- Built－in Inrush Current Limitter
- Over Current Protection
- Over Voltage Protection
- Short Circuit Protection
- Remote Sensing

Specifications

ITEM \ MODEL		WYSP－150S05A	WYSP－150S12A	WYSP－150S15A	WYSP－150S24A	WYSP－150S48A
INPUT	VOLTAGE	110VAC...3.7A / 220VAC.....2.1A(Full Load)				
	FREQUENCY	50/60Hz (47～440Hz or DC)				
	EFFICIENCY	75% typ	75% typ	75% typ	78% typ	78% typ
	INRUSHCURRENT	110VAC....14A / 220VAC....28A(Io=100%, Ta=25°C at cold start)				
OUTPUT CIRCUIT	VOLTAGE (V)	5	12	15	24	48
	CURRENT (A)	30.0	12.5	10.0	6.3	3.2
	REGULATION LINE (mV)	25Max	60Max	75Max	120Max	240Max
	REGULATION LOAD (mV)	50Max	120Max	150Max	240Max	480Max
	RIPPLE (mVp－p)	50Max	120Max	150Max	240Max	480Max
	RIPPLE NOISE (mVp－p)	100Max	170Max	200Max	290Max	530Max
	TEMPERATURE DRIFT 0 ～ 50°C (mV)	50Max	120Max	150Max	240Max	480Max
	RISE TIME (mS)	100Max (AC IN 90V/180V Io=100%)				
	HOLDING TIME (mS)	15typ (AC IN 90V/180V Io=100%)				
PROTECTION CIRCUIT	OVER CURRENT PROTECTION	Works at over 110% of rating and recovers automatically				
	OVER VOLTAGE PROTECTION	Works at 115～140% of rating				
ELECTRICALLY ISOLATED	INPUT－OUTPUT	AC 1,500V 1minute, DC 500V 100MΩ (At room temperature & Humidity)				
	INPUT－CASE.FG	AC 1,500V 1minute, DC 500V 100MΩ (At room temperature & Humidity)				
	OUTPUT－CASE	AC 500V 1minute, DC 500V 100MΩ (At room temperature & Humidity)				
ENVIRONMENT	OPERATING TEMP.AND HUMID	0 ～ +50°C, 20 ～ 90% RH (Non Condensing)				
	STORAGE TEMP. AND HUMID	−20 ～ +75°C, 20 ～ 90% RH (Non Condensing)				
GENERAL	COOLING	Natural cooling				
	FUNCTION	V. Sensor				
	WEIGHT (kg)	1.0				

Derating Curve For Ambient

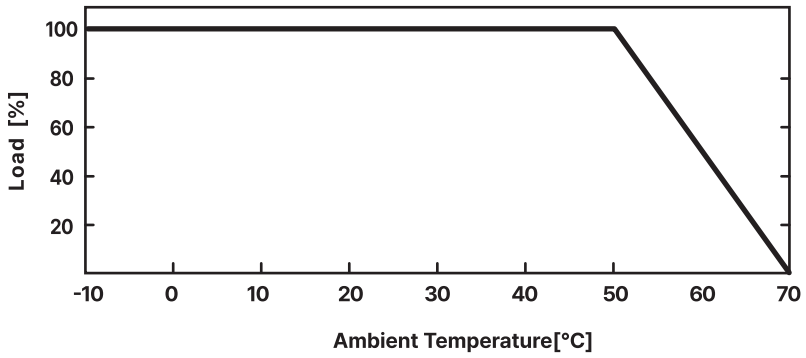

Derating Curve For Input Voltage

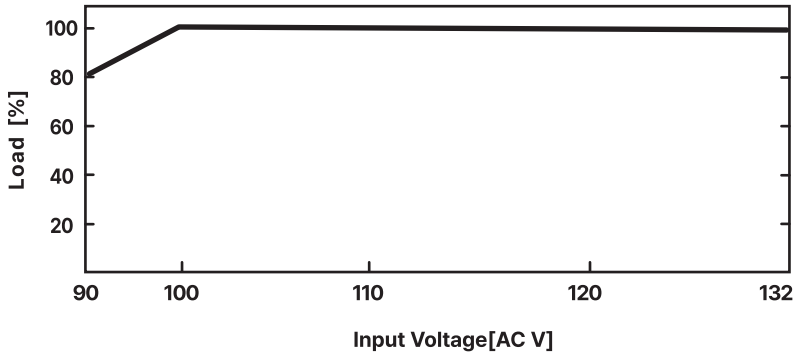

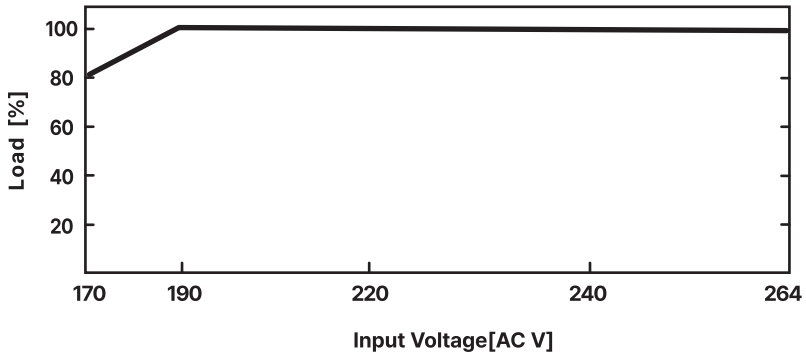

Terminal

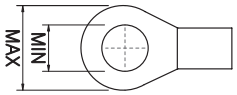

Max 6 , Min 3

Dimension

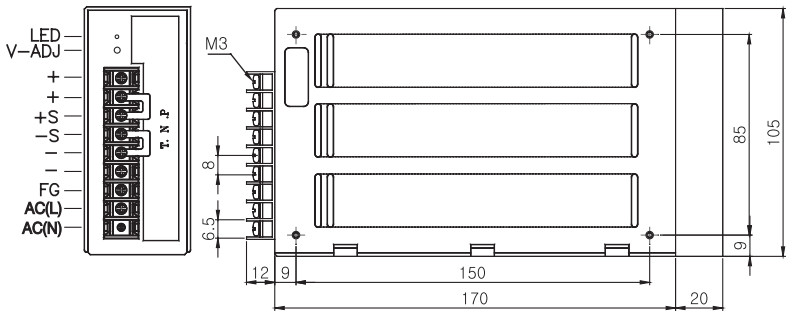

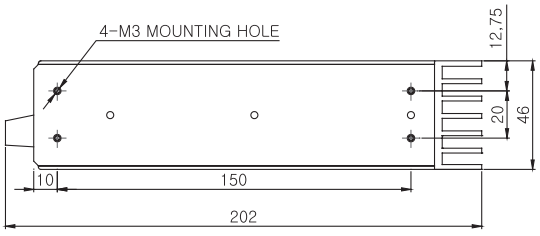

SP Series 200W

CE RoHS



Features

- Dual Input Voltage Range (AC90－132 / AC170－264)
- Built－in Inrush Current Limitter
- Over Current Protection
- Over Voltage Protection
- Short Circuit Protection
- Remote Sensing

Specifications

ITEM \ MODEL		WYSP－200S12A	WYSP－200S15A	WYSP－200S24A	WYSP－200S48A
INPUT	VOLTAGE	110VAC...3.7A / 220VAC.....2.1A(Full Load)			
	FREQUENCY	50/60Hz (47～440Hz or DC)			
	EFFICIENCY	75% typ	75% typ	78% typ	78% typ
	INRUSHCURRENT	110VAC....14A / 220VAC....28A (Io=100%, Ta=25°C at cold start)			
OUTPUT CIRCUIT	VOLTAGE (V)	12	15	24	48
	CURRENT (A)	16.7	13.4	8.4	4.2
	REGULATION LINE (mV)	60Max	75Max	120Max	240Max
	REGULATION LOAD (mV)	120Max	150Max	240Max	480Max
	RIPPLE (mVp－p)	120Max	150Max	240Max	480Max
	RIPPLE NOISE (mVp－p)	170Max	200Max	290Max	530Max
	TEMPERATURE DRIFT 0 ～ 50°C (mV)	120Max	150Max	240Max	480Max
	RISE TIME (mS)	100Max (AC IN 90V/180V Io=100%)			
	HOLDING TIME (mS)	15typ (AC IN 90V/180V Io=100%)			
PROTECTION CIRCUIT	OVER CURRENT PROTECTION	Works at over 110% of rating and recovers automatically			
	OVER VOLTAGE PROTECTION	Works at 115～140% of rating			
ELECTRICALLY ISOLATED	INPUT－OUTPUT	AC 1,500V 1minute, DC 500V 100MΩ (At room temperature & Humidity)			
	INPUT－CASE.FG	AC 1,500V 1minute, DC 500V 100MΩ (At room temperature & Humidity)			
	OUTPUT－CASE	AC 500V 1minute, DC 500V 100MΩ (At room temperature & Humidity)			
ENVIRONMENT	OPERATING TEMP.AND HUMID	0 ～ +50°C, 20 ～ 90% RH (Non Condensing)			
	STORAGE TEMP. AND HUMID	−20 ～ +75°C, 20 ～ 90% RH (Non Condensing)			
GENERAL	COOLING	Natural cooling			
	FUNCTION	V. Sensor			
	WEIGHT (kg)	1.0			

Derating Curve For Ambient

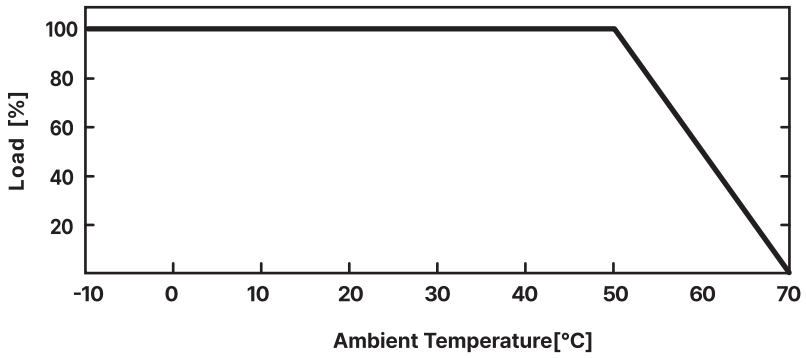

Derating Curve For Input Voltage

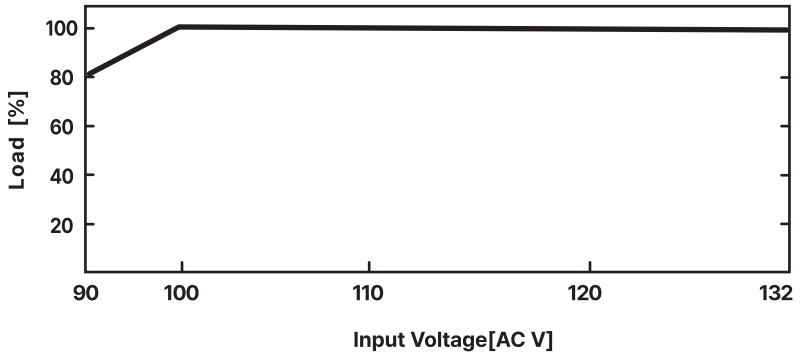

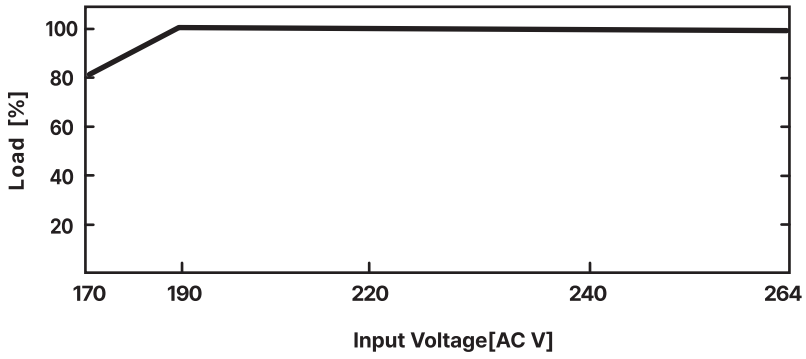

Terminal

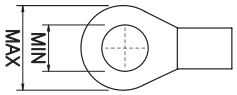

Max 6 , Min 3

Dimension

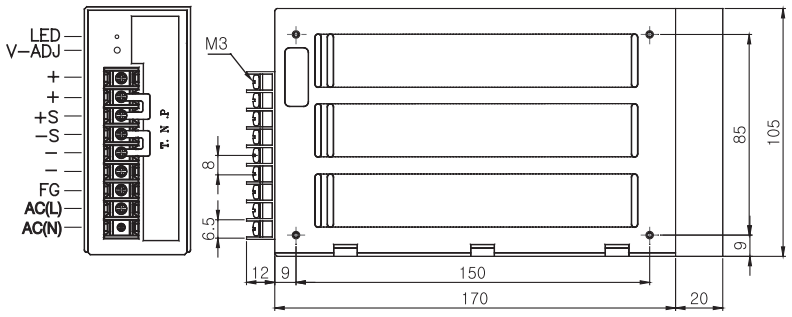

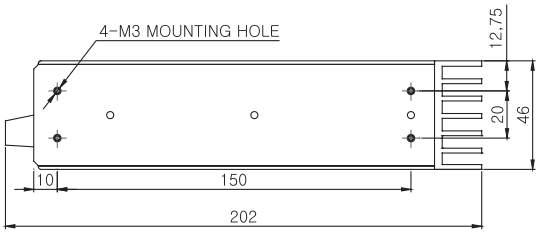

SP Series 200W (DC/DC)

CE RoHS



Features

- Input Voltage Range (DC90V~130V)
- Built-in Inrush Current Limitter
- Over Current Protection
- Over Voltage Protection
- Short Circuit Protection
- Remote Sensing

Specifications

ITEM \ MODEL		WYSP-200S24AD
INPUT	VOLTAGE	110VDC...3.7A(Full Load)
	FREQUENCY	-
	EFFICIENCY	78% typ
OUTPUT CIRCUIT	VOLTAGE (V)	24
	CURRENT (A)	8.4
	REGULATION LINE (mV)	120Max
	REGULATION LOAD (mV)	240Max
	RIPPLE (mVp-p)	240Max
	RIPPLE NOISE (mVp-p)	240Max
	TEMPERATURE DRIFT 0 ~ 50°C (mV)	240Max
	RISE TIME (mS)	100Max (DC IN 110V Io=100%)
	HOLDING TIME (mS)	15typ
PROTECTION CIRCUIT	OVER CURRENT PROTECTION	Works at over 110% of rating and recovers automatically
	OVER VOLTAGE PROTECTION	Works at 115~140% of rating
ELECTRICALLY ISOLATED	INPUT-OUTPUT	AC 1,500V 1minute, DC 500V 100MΩ (At room temperature & Humidity)
	INPUT-CASE.FG	AC 1,500V 1minute, DC 500V 100MΩ (At room temperature & Humidity)
	OUTPUT-CASE	AC 500V 1minute, DC 500V 100MΩ (At room temperature & Humidity)
ENVIRONMENT	OPERATING TEMP.AND HUMID	0 ~ +50°C, 20 ~ 90% RH (Non Condensing)
	STORAGE TEMP. AND HUMID	-20 ~ +75°C, 20 ~ 90% RH (Non Condensing)
GENERAL	COOLING	Natural cooling
	FUNCTION	V. Sensor
	WEIGHT (kg)	1.0

SP Series 200W (DC/DC)

CE RoHS

Derating Curve For Ambient

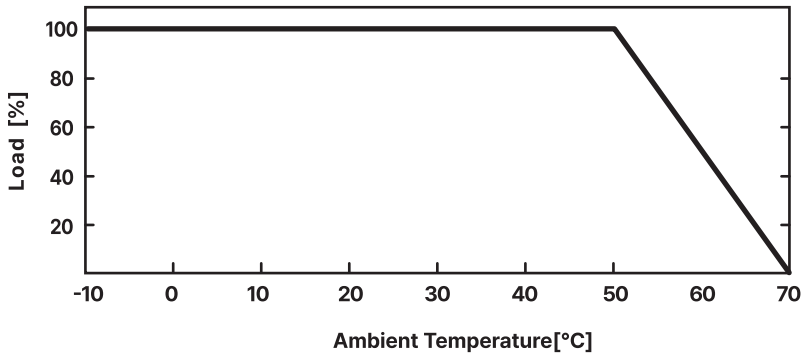

Derating Curve For Input Voltage

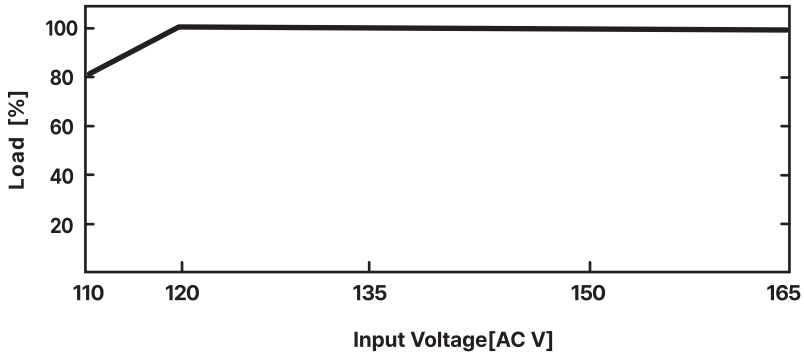

Terminal

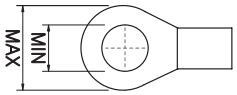

Max 6 , Min 3

Dimension

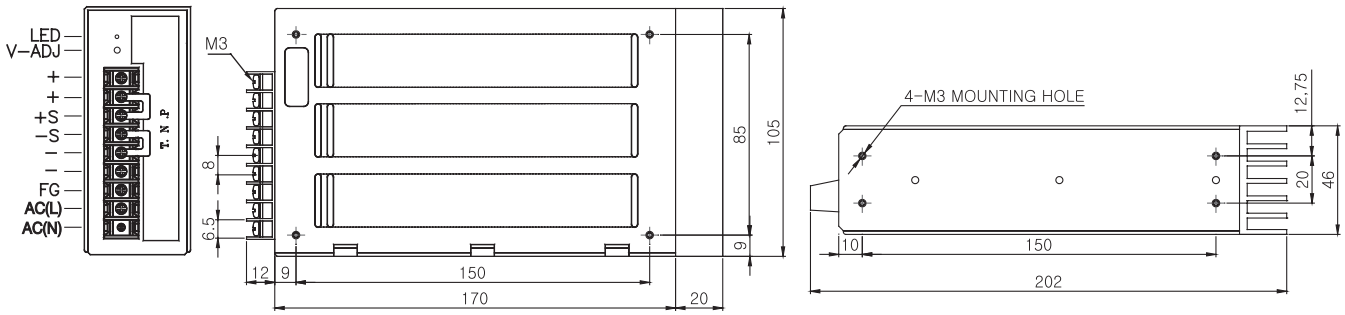

SP Series 220W

CE RoHS



Features

- Dual Input Voltage Range (AC90~132V / AC170~264V)
- Built-in Inrush Current Limitter
- Over Current Protection
- Over Voltage Protection
- Short Circuit Protection
- Remote Sensing

Specifications

ITEM \ MODEL		WYSP-220S05A	WYSP-220S12A	WYSP-220S15A	WYSP-220S24A	WYSP-220S48A
INPUT	VOLTAGE	110VAC...3.7A / 220VAC.....2.1A(Full Load)				
	FREQUENCY	50/60Hz (47~440Hz or DC)				
	EFFICIENCY	75% typ	75% typ	75% typ	75% typ	75% typ
	INRUSHCURRENT	110VAC....14A / 220VAC....28A (Io=100%, Ta=25°C at cold start)				
OUTPUT CIRCUIT	VOLTAGE (V)	5	12	15	24	48
	CURRENT (A)	44.0	18.4	14.7	9.2	4.6
	REGULATION LINE (mV)	25Max	60Max	75Max	120Max	240Max
	REGULATION LOAD (mV)	50Max	120Max	150Max	240Max	480Max
	RIPPLE (mVp-p)	50Max	120Max	150Max	240Max	480Max
	RIPPLE NOISE (mVp-p)	100Max	170Max	200Max	290Max	530Max
	TEMPERATURE DRIFT 0 ~ 50°C (mV)	50Max	120Max	150Max	240Max	480Max
	RISE TIME (mS)	100Max (AC IN 90V/180V Io=100%)				
	HOLDING TIME (mS)	15typ (AC IN 90V/180V Io=100%)				
PROTECTION CIRCUIT	OVER CURRENT PROTECTION	Works at over 110% of rating and recovers automatically				
	OVER VOLTAGE PROTECTION	Works at 115~140% of rating				
ELECTRICALLY ISOLATED	INPUT-OUTPUT	AC 1,500V 1minute, DC 500V 100MΩ (At room temperature & Humidity)				
	INPUT-CASE.FG	AC 1,500V 1minute, DC 500V 100MΩ (At room temperature & Humidity)				
	OUTPUT-CASE	AC 500V 1minute, DC 500V 100MΩ (At room temperature & Humidity)				
ENVIRONMENT	OPERATING TEMP.AND HUMID	0 ~ +50°C, 20 ~ 90% RH (Non Condensing)				
	STORAGE TEMP. AND HUMID	-20 ~ +75°C, 20 ~ 90% RH (Non Condensing)				
GENERAL	COOLING	Natural cooling				
	FUNCTION	V. Sensor				
	WEIGHT (kg)	1.5				

Derating Curve For Ambient

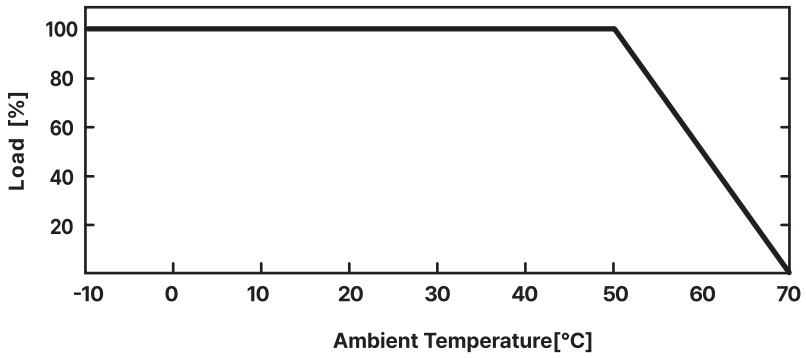

Derating Curve For Input Voltage

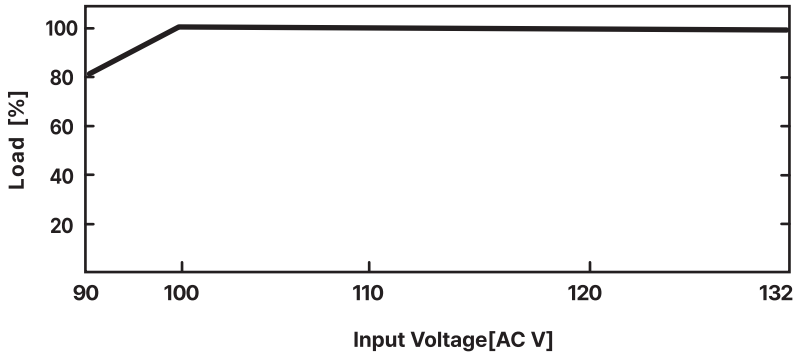

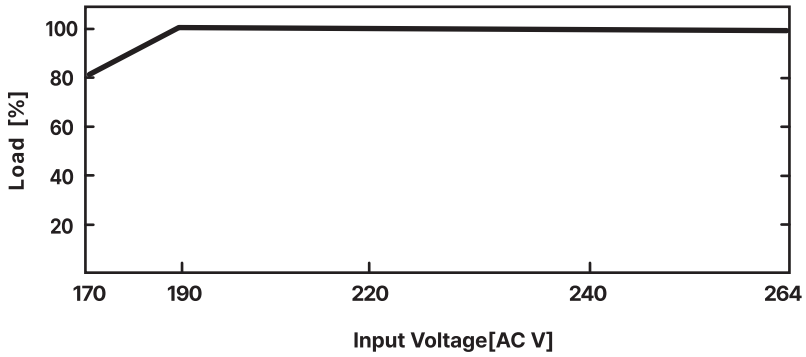

Terminal

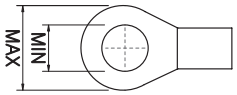

Max 8 , Min 3.5

Dimension

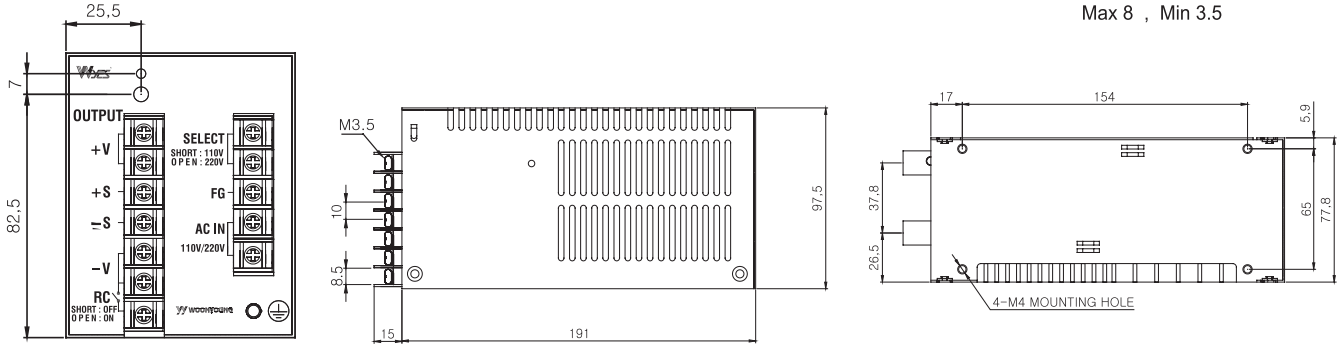

SP Series 250W

CE RoHS



Features

- Dual Input Voltage Range (AC90~132V / AC170~264V)
- Built-in Inrush Current Limitter
- Over Current Protection
- Over Voltage Protection
- Short Circuit Protection
- Remote Sensing

Specifications

ITEM \ MODEL		WYSP-250S12A	WYSP-250S15A	WYSP-250S24A	WYSP-250S48A
INPUT	VOLTAGE	110VAC...3.7A/220VAC...2.1A(Full Load)			
	FREQUENCY	50/60Hz(47~440Hz or DC)			
	EFFICIENCY	75% typ	75% typ	75% typ	78% typ
	INRUSHCURRENT	110VAC....14A / 220VAC....28A(Io=100%, Ta=25°C at cold start)			
OUTPUT CIRCUIT	VOLTAGE (V)	12	15	24	48
	CURRENT (A)	20.9	16.7	10.5	5.2
	REGULATION LINE (mV)	60Max	75Max	120Max	240Max
	REGULATION LOAD (mV)	120Max	150Max	240Max	480Max
	RIPPLE (mVp-p)	120Max	150Max	240Max	480Max
	RIPPLE NOISE (mVp-p)	170Max	200Max	290Max	530Max
	TEMPERATURE DRIFT 0 ~ 50°C (mV)	120Max	150Max	240Max	480Max
	RISE TIME (mS)	100Max (AC IN 90V/180V Io=100%)			
	HOLDING TIME (mS)	15typ (AC IN 90V/180V Io=100%)			
PROTECTION CIRCUIT	OVER CURRENT PROTECTION	Works at over 110% of rating and recovers automatically			
	OVER VOLTAGE PROTECTION	Works at 115~140% of rating			
ELECTRICALLY ISOLATED	INPUT-OUTPUT	AC 1,500V 1minute, DC 500V 100MΩ (At room temperature & Humidity)			
	INPUT-CASE.FG	AC 1,500V 1minute, DC 500V 100MΩ (At room temperature & Humidity)			
	OUTPUT-CASE	AC 500V 1minute, DC 500V 100MΩ (At room temperature & Humidity)			
ENVIRONMENT	OPERATING TEMP.AND HUMID	0 ~ +50°C, 20 ~ 90% RH (Non Condensing)			
	STORAGE TEMP. AND HUMID	-20 ~ +75°C, 20 ~ 90% RH (Non Condensing)			
GENERAL	COOLING	Natural cooling			
	FUNCTION	V. Sensor			
	WEIGHT (kg)	1.5			

Derating Curve For Ambient

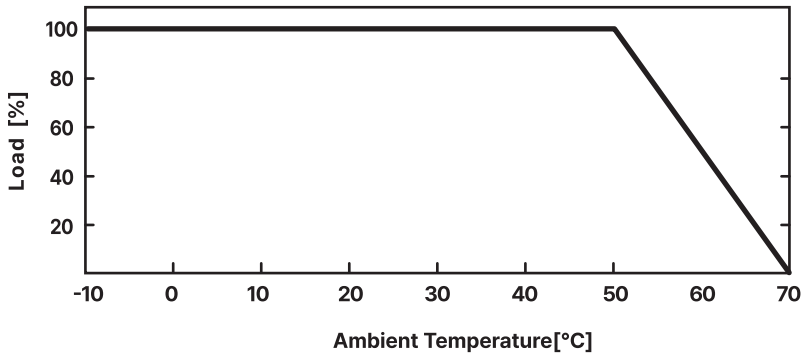

Derating Curve For Input Voltage

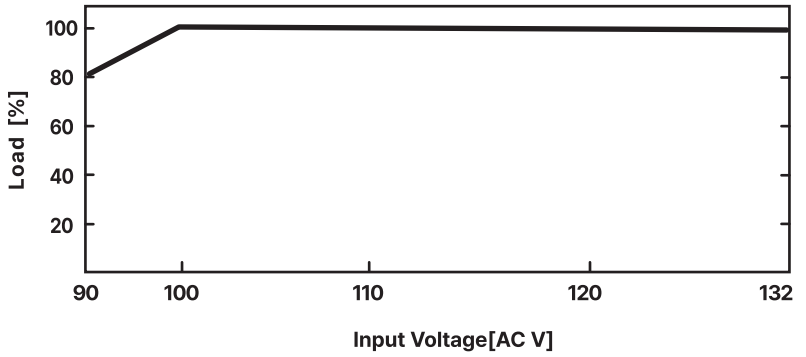

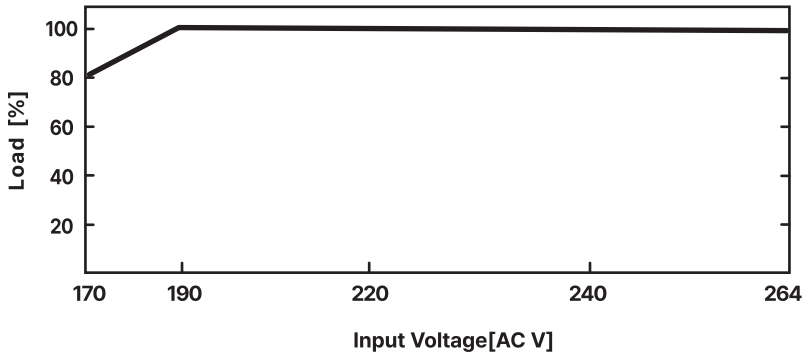

Terminal

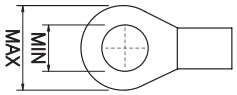

Max 8 , Min 3.5

Dimension

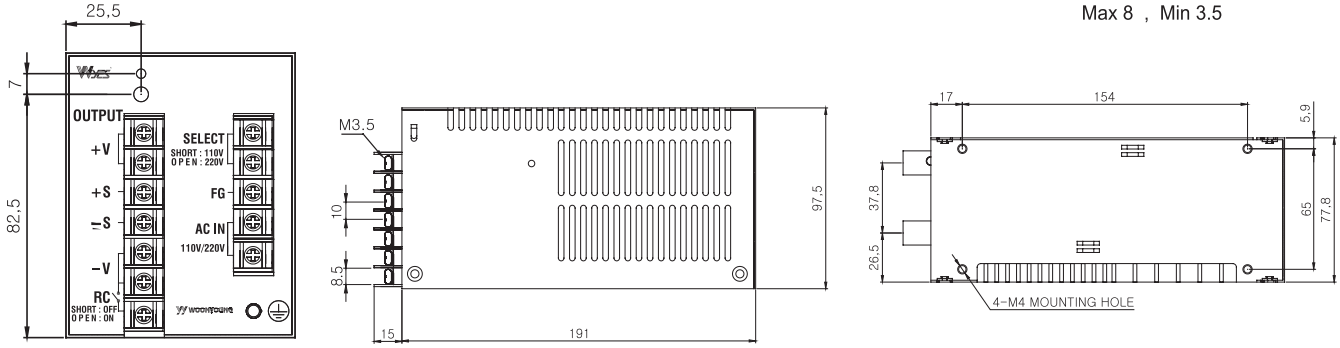

SP Series 300/500W

CE RoHS



Features

- Dual Input Voltage Range (AC90－132 / AC170－264)
- Built－in Inrush Current Limitter
- Over Current Protection
- Over Voltage Protection
- Short Circuit Protection
- Remote Sensing

Specifications

ITEM \ MODEL		WYSP－300S05A	WYSP－300S12A	WYSP－300S15A	WYSP－300S24A	WYSP-300S48A	WYSP－500S24A	WYSP－500S48A
INPUT	VOLTAGE	110VAC...7.0A / 220VAC.....3.5A(Full Load)						
	FREQUENCY	50/60Hz (47～440Hz or DC)						
	EFFICIENCY	75% typ	75% typ	80% typ	80% typ	80% typ	80% typ	80% typ
	INRUSHCURRENT	110VAC....14A / 220VAC....28A (Io=100%, Ta=25°C at cold start)						
OUTPUT CIRCUIT	VOLTAGE (V)	5	12	15	24	48	24	48
	CURRENT (A)	60.0	25.0	20.0	12.5	6.3	20.9	10.5
	REGULATION LINE (mV)	25Max	60Max	120Max	120Max	240Max	120Max	240Max
	REGULATION LOAD (mV)	50Max	120Max	240Max	240Max	480Max	240Max	480Max
	RIPPLE (mVp－p)	50Max	120Max	240Max	240Max	480Max	240Max	480Max
	RIPPLE NOISE (mVp－p)	100Max	170Max	290Max	290Max	530Max	290Max	530Max
	TEMPERATURE DRIFT 0 ～ 50°C (mV)	50Max	120Max	240Max	240Max	480Max	240Max	480Max
	RISE TIME (mS)	200Max (AC IN 90V/180V Io=100%)						
	HOLDING TIME (mS)	20typ (AC IN 90V/180V Io=100%)						
PROTECTION CIRCUIT	OVER CURRENT PROTECTION	Works at over 110% of rating and recovers automatically						
	OVER VOLTAGE PROTECTION	Works at 115～140% of rating						
ELECTRICALLY ISOLATED	INPUT－OUTPUT	AC 1,500V 1minute, DC 500V 100MΩ (At room temperature & Humidity)						
	INPUT－CASE.FG	AC 1,500V 1minute, DC 500V 100MΩ (At room temperature & Humidity)						
	OUTPUT－CASE	AC 500V 1minute, DC 500V 100MΩ (At room temperature & Humidity)						
ENVIRONMENT	OPERATING TEMP.AND HUMID	0 ～ +50°C, 20 ～ 90% RH (Non Condensing)						
	STORAGE TEMP. AND HUMID	−20 ～ +75°C, 20 ～ 90% RH (Non Condensing)						
GENERAL	COOLING	Fan cooling						
	FUNCTION	V.Sensor, Remote Control						
	WEIGHT (kg)	1.9						

Derating Curve For Ambient

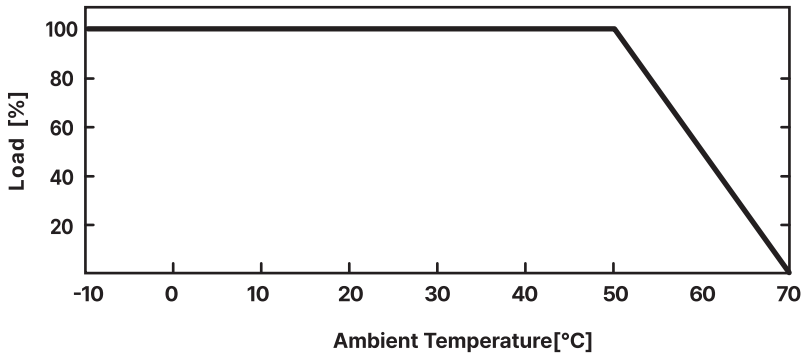

Derating Curve For Input Voltage

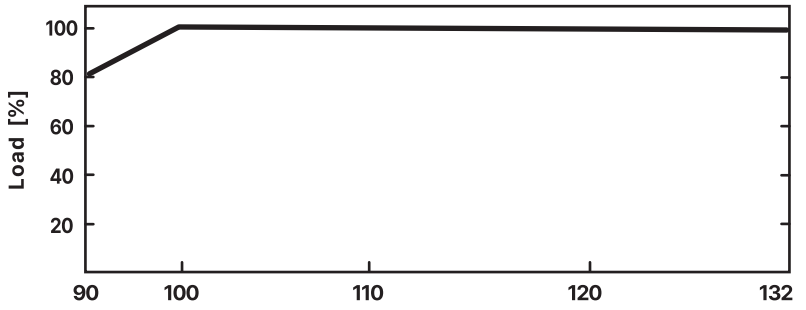

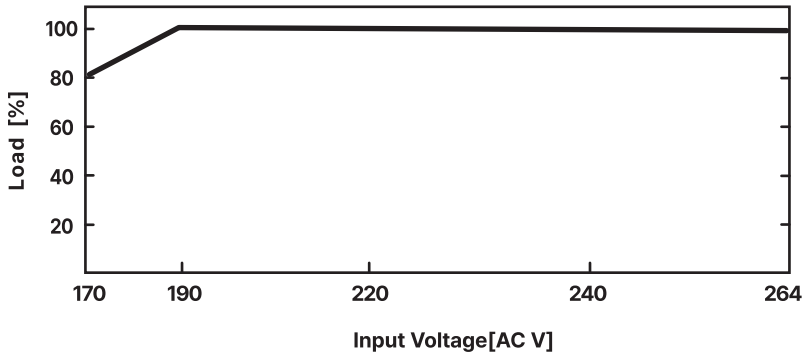

Dimension

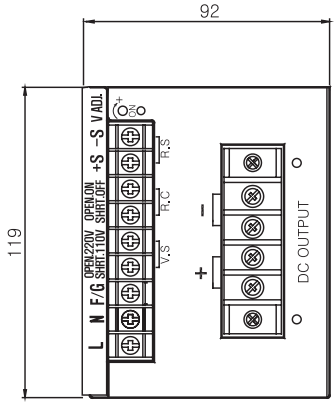

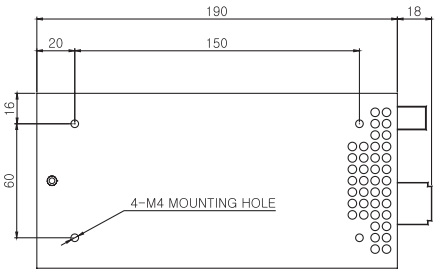

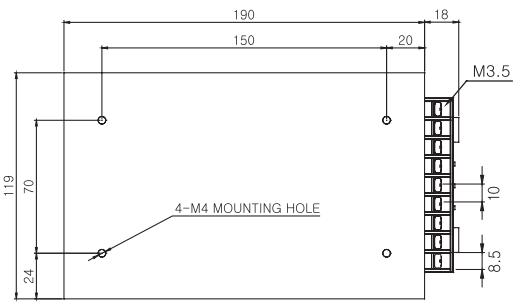

Terminal

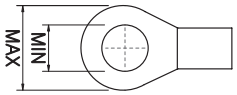

Max 8 , Min 3.5

SP Series 500W

CE RoHS



Features

- Dual Input Voltage Range (AC90~132V / AC170~264V)
- Built-in Inrush Current Limitter
- Over Current Protection
- Over Voltage Protection
- Short Circuit Protection
- Remote Sensing
- Over Temperature Protection
- Remote Control

Specifications

ITEM \ MODEL		WYSP-500S05C	WYSP-500S12C	WYSP-500S24C	WYSP-500S48C
INPUT	VOLTAGE	110VAC...14.0A/220VAC...7.0A(Full Load)			
	FREQUENCY	50/60Hz(47~440Hz or DC)			
	EFFICIENCY	75% typ	75% typ	80% typ	80% typ
	INRUSHCURRENT	110VAC...30A/220VAC...60A (Io=100%, Ta=25°C at cold start)			
OUTPUT CIRCUIT	VOLTAGE (V)	5	12	24	48
	CURRENT (A)	100.0	41.7	20.9	10.5
	REGULATION LINE (mV)	25Max	60Max	120Max	240Max
	REGULATION LOAD (mV)	50Max	120Max	240Max	480Max
	RIPPLE (mVp-p)	50Max	120Max	240Max	480Max
	RIPPLE NOISE (mVp-p)	100Max	170Max	290Max	530Max
	TEMPERATURE DRIFT 0 ~ 50°C (mV)	50Max	120Max	240Max	480Max
	RISE TIME (mS)	200Max (AC IN 90V/180V Io=100%)			
	HOLDING TIME (mS)	20typ (AC IN 90V/180V Io=100%)			
PROTECTION CIRCUIT	OVER CURRENT PROTECTION	Works at over 110% of rating and recovers automatically			
	OVER VOLTAGE PROTECTION	Works at 115~140% of rating			
ELECTRICALLY ISOLATED	INPUT-OUTPUT	AC 1,500V 1minute, DC 500V 100MΩ (At room temperature & Humidity)			
	INPUT-CASE.FG	AC 1,500V 1minute, DC 500V 100MΩ (At room temperature & Humidity)			
	OUTPUT-CASE	AC 500V 1minute, DC 500V 100MΩ (At room temperature & Humidity)			
ENVIRONMENT	OPERATING TEMP.AND HUMID	0 ~ +50°C, 20 ~ 90% RH (Non Condensing)			
	STORAGE TEMP. AND HUMID	-20 ~ +75°C, 20 ~ 90% RH (Non Condensing)			
GENERAL	COOLING	Fan cooling			
	FUNCTION	V.Sensor, Remote Control			
	WEIGHT (kg)	2.5			

SP Series 500W

CE RoHS

Derating Curve For Ambient

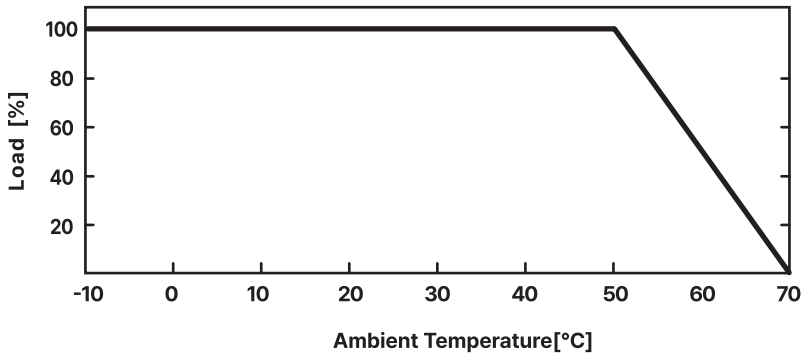

Derating Curve For Input Voltage

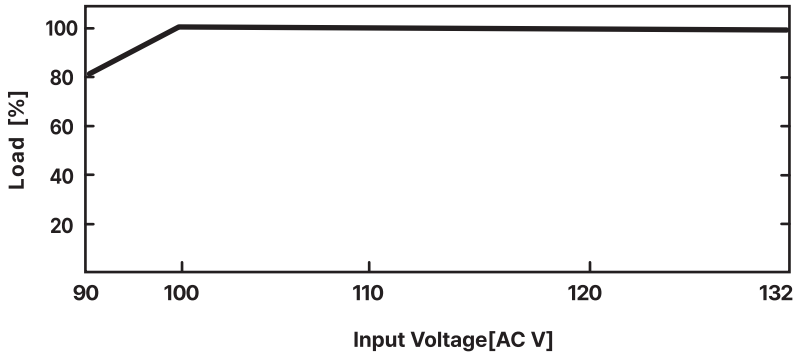

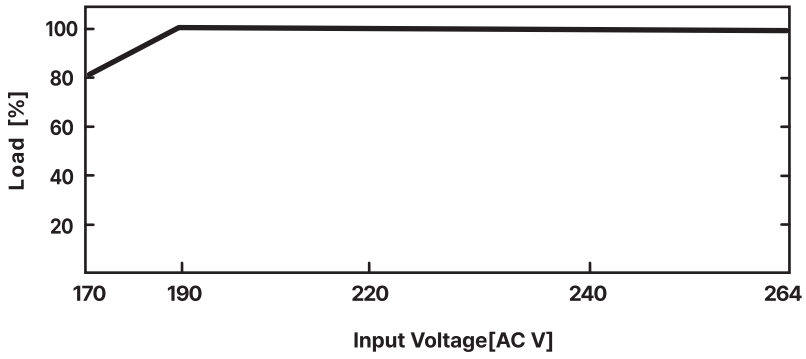

Dimension

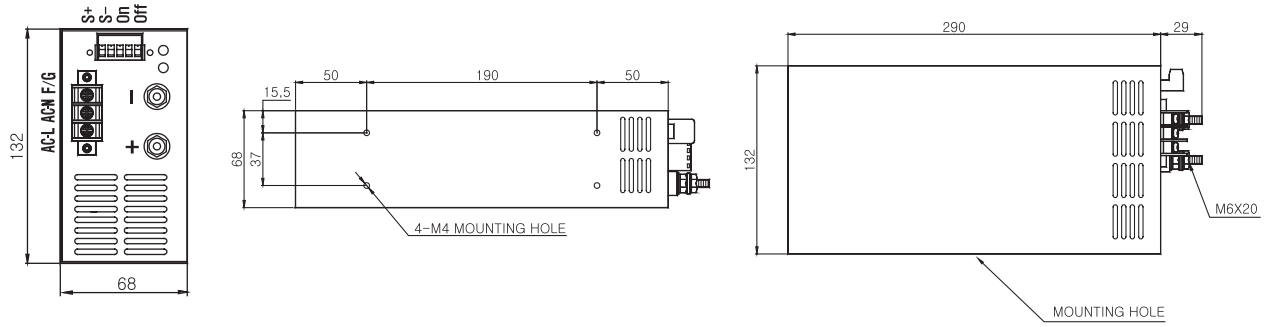

SP Series 600W

CE RoHS



Features

- Dual Input Voltage Range (AC90~132V / AC170~264V)
- Built-in Inrush Current Limitter
- Over Current Protection
- Over Voltage Protection
- Over Temperature Protection
- Short Circuit Protection
- Remote Sensing
- Remote Control

Specifications

ITEM \ MODEL		WYSP-600S05C	WYSP-600S12C	WYSP-600S24C	WYSP-600S48C
INPUT	VOLTAGE	110VAC...14.0A/220VAC...7.0A(Full Load)			
	FREQUENCY	50/60Hz (47~440Hz or DC)			
	EFFICIENCY	75% typ	75% typ	80% typ	80% typ
	INRUSHCURRENT	110VAC...30A/220VAC...60A (Io=100%, Ta=25°C at cold start)			
OUTPUT CIRCUIT	VOLTAGE (V)	5	12	24	48
	CURRENT (A)	120.0	50.0	25.0	12.5
	REGULATION LINE (mV)	25Max	60Max	120Max	240Max
	REGULATION LOAD (mV)	50Max	120Max	240Max	480Max
	RIPPLE (mVp-p)	50Max	120Max	240Max	480Max
	RIPPLE NOISE (mVp-p)	100Max	170Max	290Max	530Max
	TEMPERATURE DRIFT 0 ~ 50°C (mV)	50Max	120Max	240Max	480Max
	RISE TIME (mS)	200Max (AC IN 90V/180V Io=100%)			
	HOLDING TIME (mS)	20typ (AC IN 90V/180V Io=100%)			
PROTECTION CIRCUIT	OVER CURRENT PROTECTION	Works at over 110% of rating and recovers automatically			
	OVER VOLTAGE PROTECTION	Works at 115~140% of rating			
ELECTRICALLY ISOLATED	INPUT-OUTPUT	AC 1,500V 1minute, DC 500V 100MΩ (At room temperature & Humidity)			
	INPUT-CASE.FG	AC 1,500V 1minute, DC 500V 100MΩ (At room temperature & Humidity)			
	OUTPUT-CASE	AC 500V 1minute, DC 500V 100MΩ (At room temperature & Humidity)			
ENVIRONMENT	OPERATING TEMP.AND HUMID	0 ~ +50°C, 20 ~ 90% RH (Non Condensing)			
	STORAGE TEMP. AND HUMID	-20 ~ +75°C, 20 ~ 90% RH (Non Condensing)			
GENERAL	COOLING	Fan cooling			
	FUNCTION	V.Sensor, Remote Control			
	WEIGHT (kg)	2.5			

SP Series 600W

CE RoHS

Derating Curve For Ambient

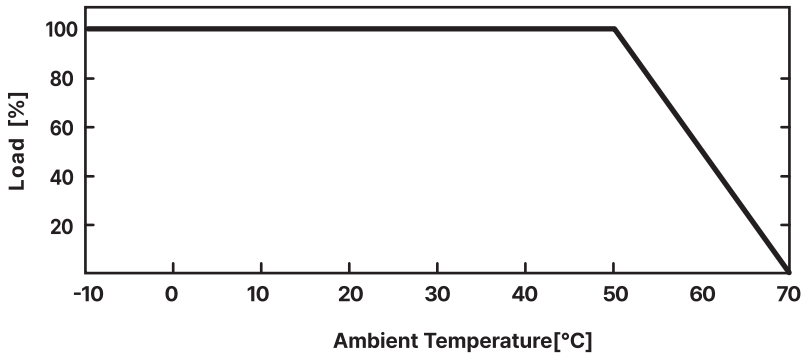

Derating Curve For Input Voltage

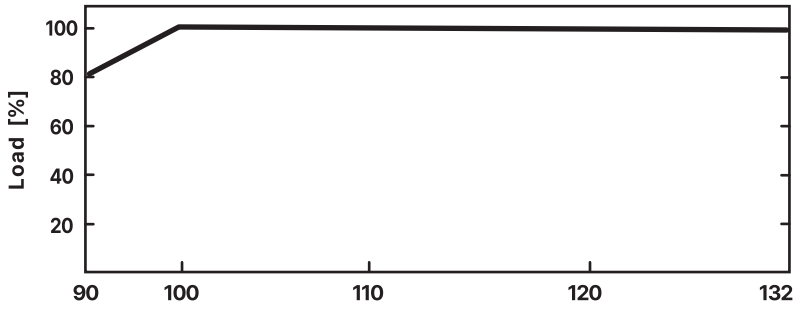

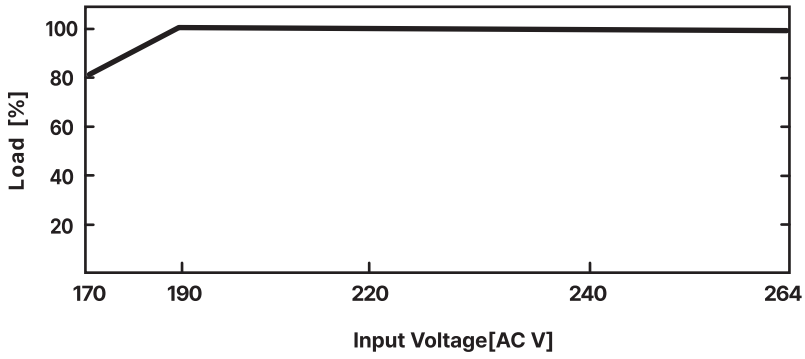

Dimension

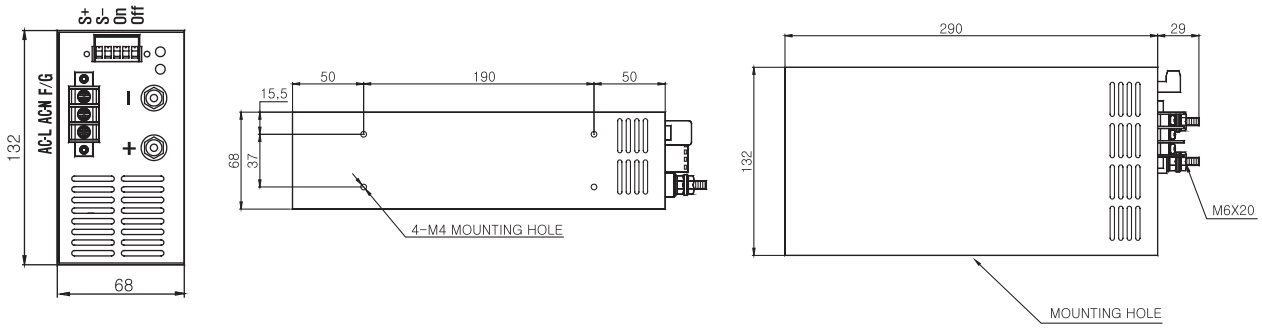

SP Series PFC type 600W

CE RoHS

PFC Type

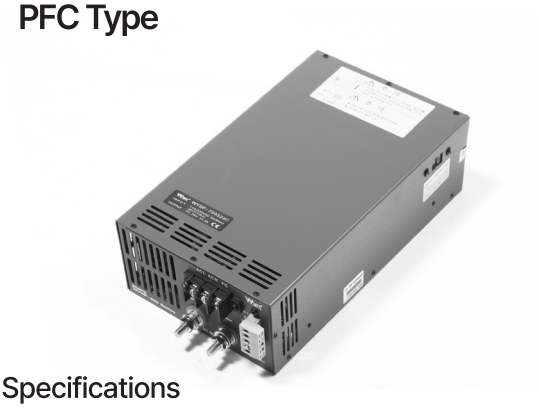

Features

- Wide Input Voltage Range (AC90~264V)
- Built-in Inrush Current Limitter
- Over Current Protection
- Over Voltage Protection
- Over Temperature Protection
- Short Circuit Protection
- Remote Sensing
- Remote Control
- Built-in PFC Circuit(0.9 typ)

Specifications

ITEM \ MODEL		WYSP-600S05CP	WYSP-600S12CP	WYSP-600S24CP	WYSP-600S48CP
INPUT	VOLTAGE	110VAC...14.0A/220VAC...7.0A(Full Load)			
	FREQUENCY	50/60Hz(47~440Hz or DC)			
	EFFICIENCY	75% typ	75% typ	80% typ	80% typ
	INRUSHCURRENT	110VAC...30A/220VAC...60A (Io=100%, Ta=25°C at cold start)			
OUTPUT CIRCUIT	VOLTAGE (V)	5	12	24	48
	CURRENT (A)	120.0	50.0	25.0	12.5
	REGULATION LINE (mV)	25Max	60Max	120Max	240Max
	REGULATION LOAD (mV)	50Max	120Max	240Max	480Max
	RIPPLE (mVp-p)	50Max	120Max	240Max	480Max
	RIPPLE NOISE (mVp-p)	100Max	170Max	290Max	530Max
	TEMPERATURE DRIFT 0 ~ 50°C (mV)	50Max	120Max	240Max	480Max
	RISE TIME (mS)	300Max (AC IN 90V/180V Io=100%)			
	HOLDING TIME (mS)	20typ (AC IN 90V/180V Io=100%)			
PROTECTION CIRCUIT	OVER CURRENT PROTECTION	Works at over 110% of rating and recovers automatically			
	OVER VOLTAGE PROTECTION	Works at 115~140% of rating			
ELECTRICALLY ISOLATED	INPUT-OUTPUT	AC 1,500V 1minute, DC 500V 100MΩ (At room temperature & Humidity)			
	INPUT-CASE.FG	AC 1,500V 1minute, DC 500V 100MΩ (At room temperature & Humidity)			
	OUTPUT-CASE	AC 500V 1minute, DC 500V 100MΩ (At room temperature & Humidity)			
ENVIRONMENT	OPERATING TEMP.AND HUMID	0 ~ +50°C, 20 ~ 90% RH (Non Condensing)			
	STORAGE TEMP. AND HUMID	-20 ~ +75°C, 20 ~ 90% RH (Non Condensing)			
GENERAL	COOLING	Fan cooling			
	FUNCTION	V.Sensor, Remote Control			
	WEIGHT (kg)	2.9			

SP Series PFC type 600W

CE RoHS

Derating Curve For Ambient

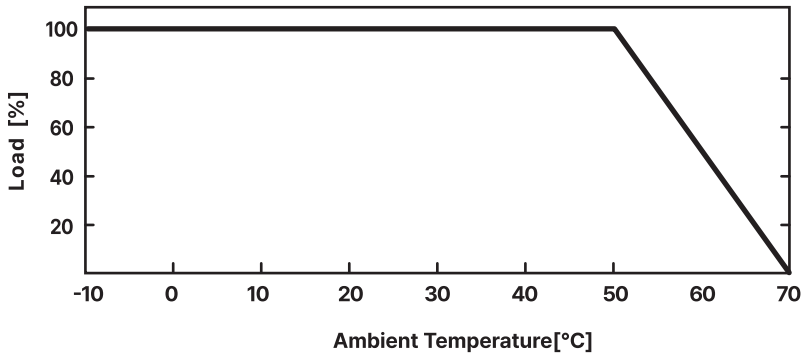

Derating Curve For Input Voltage

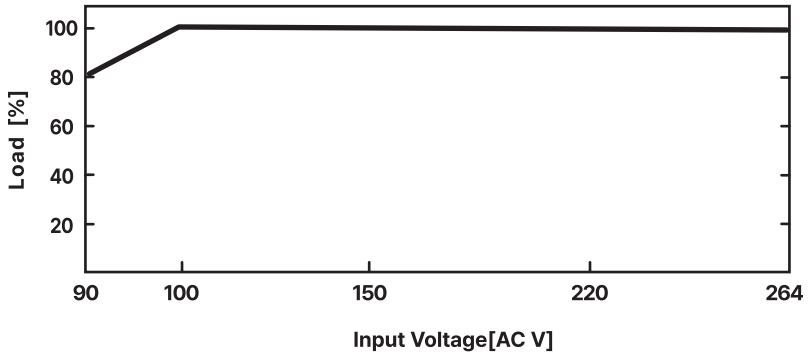

Dimension

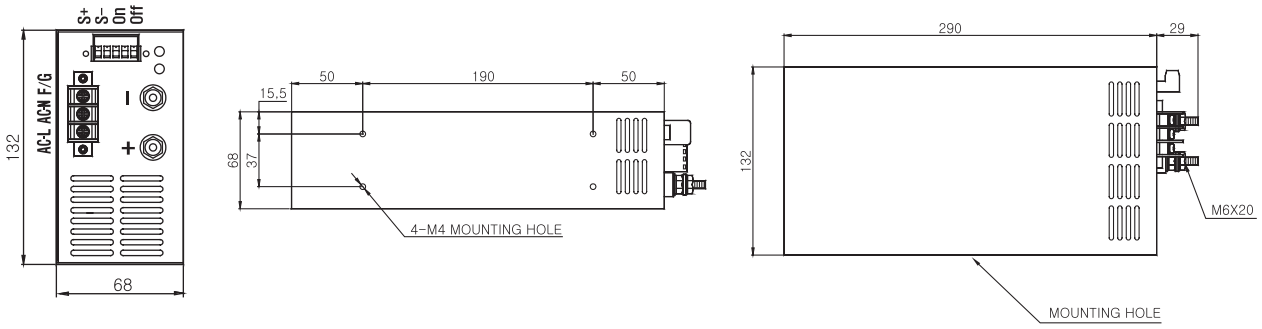

SP Series 750W

CE RoHS



Features

- Dual Input Voltage Range (AC90~132V / AC170~264V)
- Built-in Inrush Current Limitter
- Over Current Protection
- Short Circuit Protection
- Over Voltage Protection
- Over Temperature Protection
- Remote Sensing
- Remote Control

Specifications

ITEM \ MODEL		WYSP-750S12C	WYSP-750S24C	WYSP-750S48C
INPUT	VOLTAGE	110VAC...17.0A / 220VAC.....8.7A(Full Load)		
	FREQUENCY	50/60Hz (47~440Hz or DC)		
	EFFICIENCY	70% typ	75% typ	80% typ
	INRUSHCURRENT	110VAC...30A/220VAC...60A (Io=100%, Ta=25°C at cold start)		
OUTPUT CIRCUIT	VOLTAGE (V)	12	24	48
	CURRENT (A)	62.5	31.3	15.7
	REGULATION LINE (mV)	65Max	125Max	245Max
	REGULATION LOAD (mV)	125Max	245Max	485Max
	RIPPLE (mVp-p)	125Max	245Max	485Max
	RIPPLE NOISE (mVp-p)	175Max	295Max	535Max
	TEMPERATURE DRIFT 0 ~ 50°C (mV)	125Max	245Max	485Max
	RISE TIME (mS)	200Max (AC IN 90V/180V Io=100%)		
	HOLDING TIME (mS)	20typ (AC IN 90V/180V Io=100%)		
PROTECTION CIRCUIT	OVER CURRENT PROTECTION	Works at over 110% of rating and recovers automatically		
	OVER VOLTAGE PROTECTION	Works at 115~140% of rating		
ELECTRICALLY ISOLATED	INPUT-OUTPUT	AC 1,500V 1minute, DC 500V 100MΩ (At room temperature & Humidity)		
	INPUT-CASE.FG	AC 1,500V 1minute, DC 500V 100MΩ (At room temperature & Humidity)		
	OUTPUT-CASE	AC 500V 1minute, DC 500V 100MΩ (At room temperature & Humidity)		
ENVIRONMENT	OPERATING TEMP.AND HUMID	0 ~ +50°C, 20 ~ 90% RH (Non Condensing)		
	STORAGE TEMP. AND HUMID	-20 ~ +75°C, 20 ~ 90% RH (Non Condensing)		
GENERAL	COOLING	Fan cooling		
	FUNCTION	V.Sensor, Remote Control		
	WEIGHT (kg)	2.6		

SP Series 750W

CE RoHS

Derating Curve For Ambient

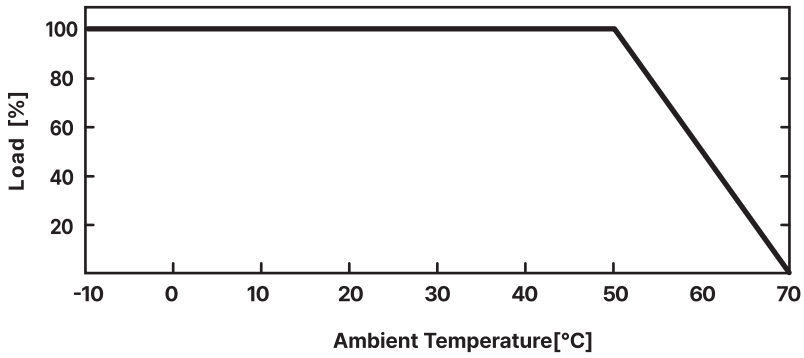

Derating Curve For Input Voltage

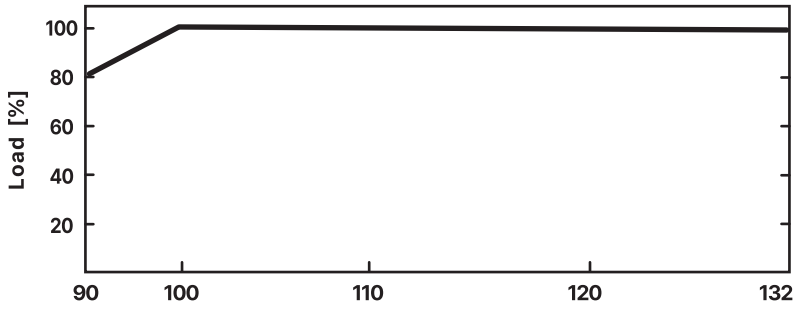

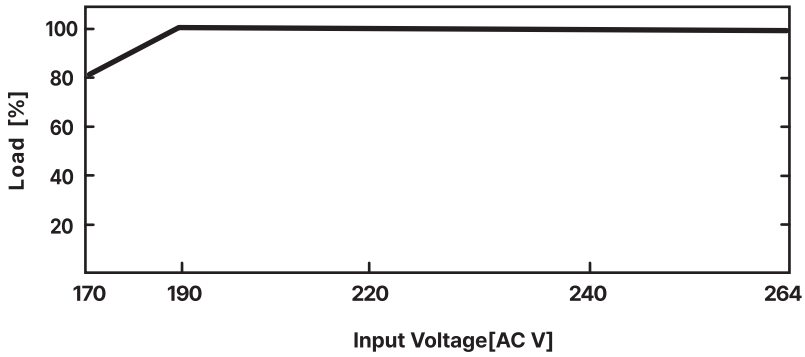

Dimension

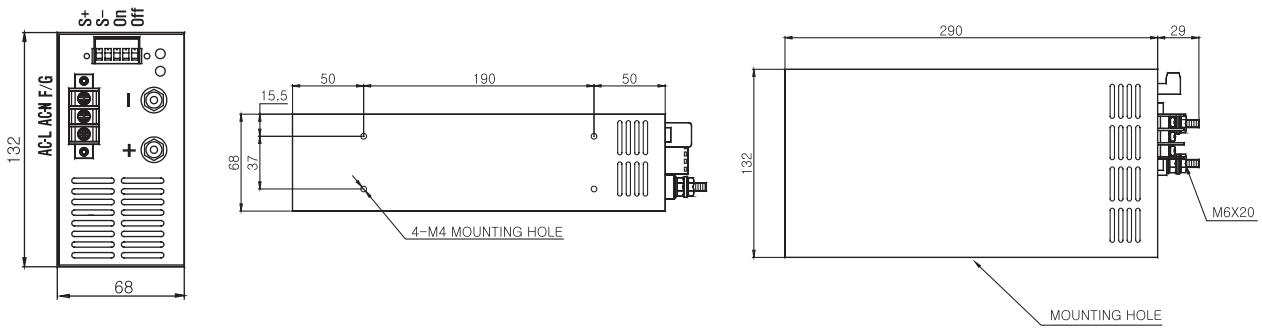

SP Series 1000W

CE RoHS



Features

- Input Voltage Range (AC170~264V)
- Built-in Inrush Current Limitter
- Over Current Protection
- Short Circuit Protection
- Over Voltage Protection
- Over Temperature Protection
- Remote Sensing
- Remote Control

Specifications

ITEM \ MODEL		WYSP-1000S05C	WYSP-1000S12C	WYSP-1000S24C	WYSP-1000S48C
INPUT	VOLTAGE	220VAC...16.0A (Full Load)			
	FREQUENCY	50/60Hz(47~440Hz or DC)			
	EFFICIENCY	75% typ	80% typ	80% typ	85% typ
	INRUSHCURRENT	220VAC...60A (Io=100%, Ta=25°C at cold start)			
OUTPUT CIRCUIT	VOLTAGE (V)	5	12	24	48
	CURRENT (A)	200.0	83.4	41.7	20.9
	REGULATION LINE (mV)	25Max	60Max	120Max	240Max
	REGULATION LOAD (mV)	50Max	120Max	240Max	480Max
	RIPPLE (mVp-p)	50Max	120Max	240Max	480Max
	RIPPLE NOISE (mVp-p)	100Max	170Max	290Max	530Max
	TEMPERATURE DRIFT 0 ~ 50°C (mV)	50Max	120Max	240Max	480Max
	RISE TIME (mS)	200Max (AC IN 180V Io=100%)			
	HOLDING TIME (mS)	10typ (AC IN 180V Io=100%)			
PROTECTION CIRCUIT	OVER CURRENT PROTECTION	Works at over 110% of rating and recovers automatically			
	OVER VOLTAGE PROTECTION	Works at 115~140% of rating			
ELECTRICALLY ISOLATED	INPUT-OUTPUT	AC 1,500V 1minute, DC 500V 100MΩ (At room temperature & Humidity)			
	INPUT-CASE.FG	AC 1,500V 1minute, DC 500V 100MΩ (At room temperature & Humidity)			
	OUTPUT-CASE	AC 500V 1minute, DC 500V 100MΩ (At room temperature & Humidity)			
ENVIRONMENT	OPERATING TEMP.AND HUMID	0 ~ +50°C, 20 ~ 90% RH (Non Condensing)			
	STORAGE TEMP. AND HUMID	-20 ~ +75°C, 20 ~ 90% RH (Non Condensing)			
GENERAL	COOLING	Fan cooling			
	FUNCTION	V.Sensor, Remote Control, Fan			
	WEIGHT (kg)	5.1			

Derating Curve For Ambient

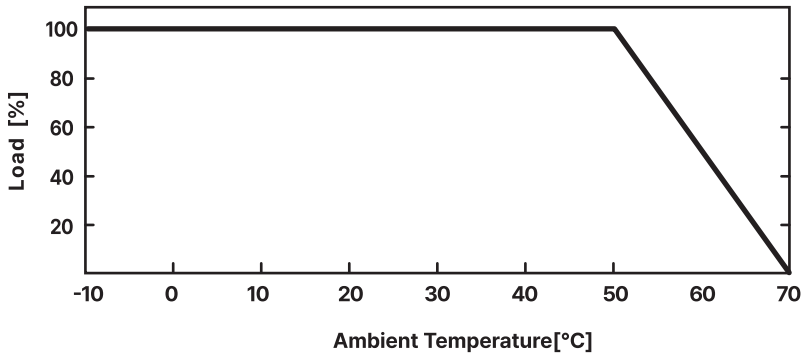

Derating Curve For Input Voltage

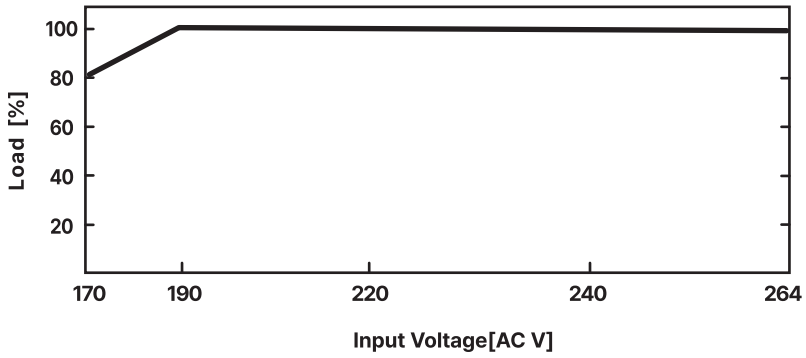

Dimension

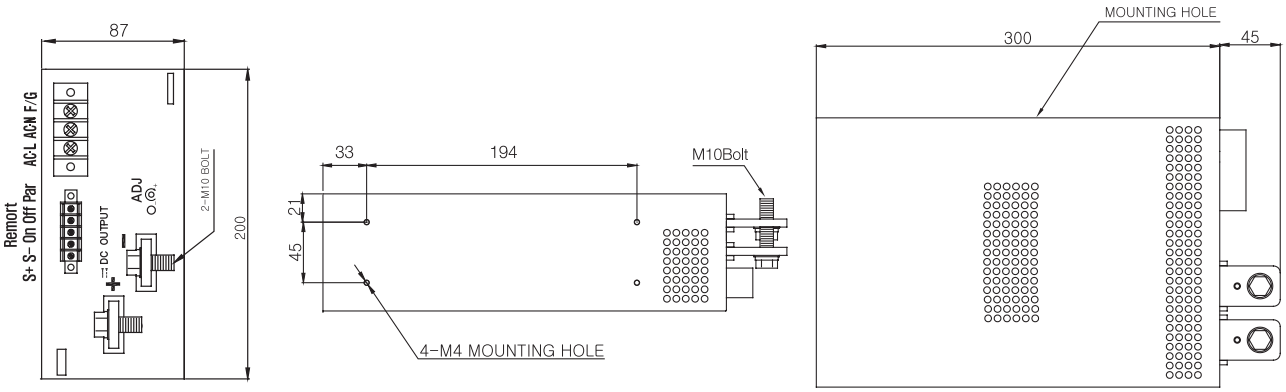

SP Series 1200W

CE RoHS



Features

- Input Voltage Range (AC170~264V)
- Built-in Inrush Current Limitter
- Over Current Protection
- Over Voltage Protection
- Over Temperature Protection
- Short Circuit Protection
- Remote Sensing
- Remote Control

Specifications

ITEM \ MODEL		WYSP-1200S05C	WYSP-1200S12C	WYSP-1200S24C	WYSP-1200S48C
INPUT	VOLTAGE	220VAC...16.0A (Full Load)			
	FREQUENCY	50/60Hz(47~440Hz or DC)			
	EFFICIENCY	75% typ	80% typ	80% typ	85% typ
	INRUSHCURRENT	220VAC...60A (Io=100%, Ta=25°C at cold start)			
OUTPUT CIRCUIT	VOLTAGE (V)	5	12	24	48
	CURRENT (A)	240.0	100.0	50.0	25.0
	REGULATION LINE (mV)	25Max	60Max	120Max	240Max
	REGULATION LOAD (mV)	50Max	120Max	240Max	480Max
	RIPPLE (mVp-p)	50Max	120Max	240Max	480Max
	RIPPLE NOISE (mVp-p)	100Max	170Max	290Max	530Max
	TEMPERATURE DRIFT 0 ~ 50°C (mV)	50Max	120Max	240Max	480Max
	RISE TIME (mS)	200Max (AC IN 180V Io=100%)			
	HOLDING TIME (mS)	10typ (AC IN 180V Io=100%)			
PROTECTION CIRCUIT	OVER CURRENT PROTECTION	Works at over 110% of rating and recovers automatically			
	OVER VOLTAGE PROTECTION	Works at 115~140% of rating			
ELECTRICALLY ISOLATED	INPUT-OUTPUT	AC 1,500V 1minute, DC 500V 100MΩ (At room temperature & Humidity)			
	INPUT-CASE.FG	AC 1,500V 1minute, DC 500V 100MΩ (At room temperature & Humidity)			
	OUTPUT-CASE	AC 500V 1minute, DC 500V 100MΩ (At room temperature & Humidity)			
ENVIRONMENT	OPERATING TEMP.AND HUMID	0 ~ +50°C, 20 ~ 90% RH (Non Condensing)			
	STORAGE TEMP. AND HUMID	-20 ~ +75°C, 20 ~ 90% RH (Non Condensing)			
GENERAL	COOLING	Fan cooling			
	FUNCTION	V.Sensor, Remote Control			
	WEIGHT (kg)	5.1			

Derating Curve For Ambient

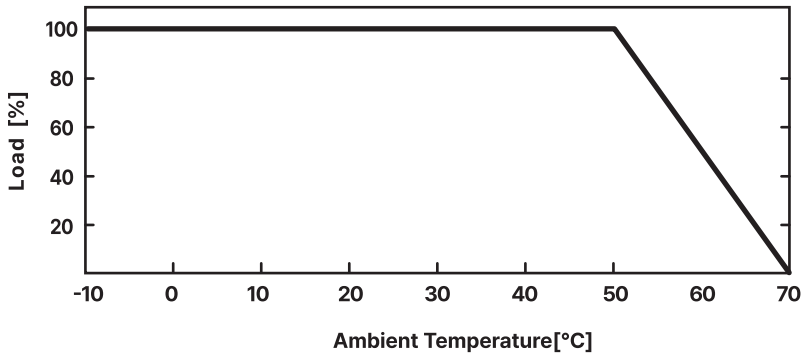

Derating Curve For Input Voltage

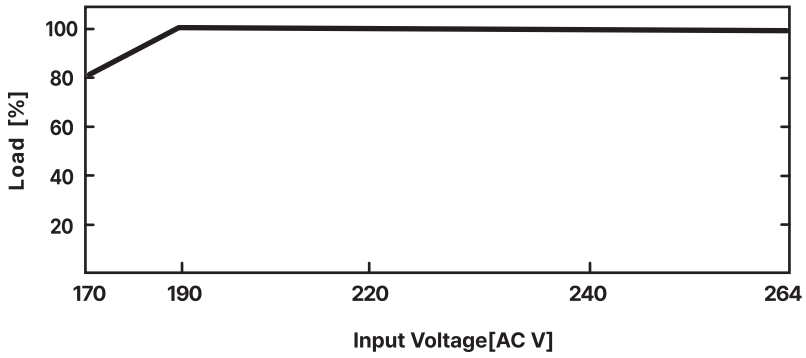

Dimension

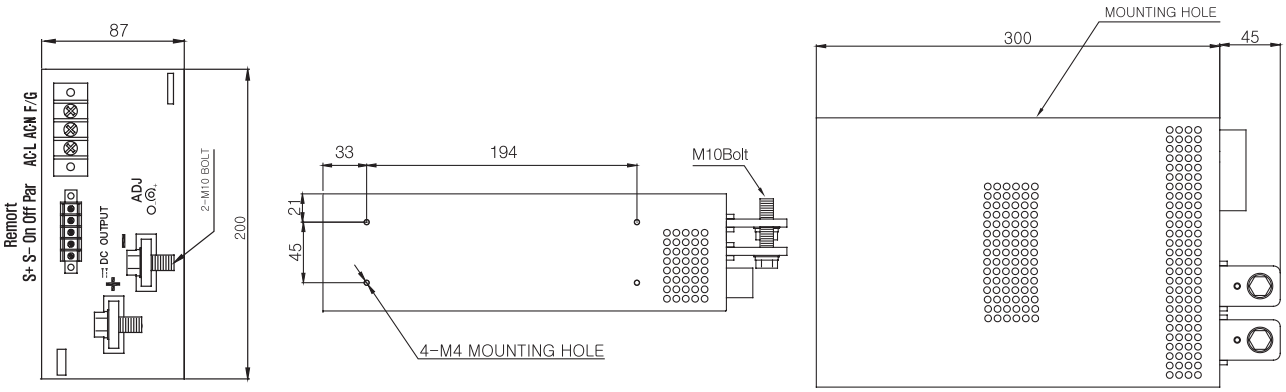

SP Series 1500W

CE RoHS



Features

- Input Voltage Range (AC170~264V)
- Built-in Inrush Current Limitter
- Over Current Protection
- Over Voltage Protection
- Over Temperature Protection
- Short Circuit Protection
- Remote Sensing
- Remote Control

Specifications

ITEM \ MODEL		WYSP-1500S05C	WYSP-1500S12C	WYSP-1500S24C	WYSP-1500S48C
INPUT	VOLTAGE	220VAC...16.0A (Full Load)			
	FREQUENCY	50/60Hz(47~440Hz or DC)			
	EFFICIENCY	75% typ	80% typ	80% typ	85% typ
	INRUSHCURRENT	220VAC...60A (Io=100%, Ta=25°C at cold start)			
OUTPUT CIRCUIT	VOLTAGE (V)	5	12	24	48
	CURRENT (A)	300.0	125.0	62.5	31.3
	REGULATION LINE (mV)	25Max	60Max	120Max	240Max
	REGULATION LOAD (mV)	50Max	120Max	240Max	480Max
	RIPPLE (mVp-p)	50Max	120Max	240Max	480Max
	RIPPLE NOISE (mVp-p)	100Max	170Max	290Max	530Max
	TEMPERATURE DRIFT 0 ~ 50°C (mV)	50Max	120Max	240Max	480Max
	RISE TIME (mS)	200Max (AC IN 180V Io=100%)			
	HOLDING TIME (mS)	10typ (AC IN 180V Io=100%)			
PROTECTION CIRCUIT	OVER CURRENT PROTECTION	Works at over 110% of rating and recovers automatically			
	OVER VOLTAGE PROTECTION	Works at 115~140% of rating			
ELECTRICALLY ISOLATED	INPUT-OUTPUT	AC 1,500V 1minute, DC 500V 100MΩ (At room temperature & Humidity)			
	INPUT-CASE.FG	AC 1,500V 1minute, DC 500V 100MΩ (At room temperature & Humidity)			
	OUTPUT-CASE	AC 500V 1minute, DC 500V 100MΩ (At room temperature & Humidity)			
ENVIRONMENT	OPERATING TEMP.AND HUMID	0 ~ +50°C, 20 ~ 90% RH (Non Condensing)			
	STORAGE TEMP. AND HUMID	-20 ~ +75°C, 20 ~ 90% RH (Non Condensing)			
GENERAL	COOLING	Fan cooling			
	FUNCTION	V.Sensor, Remote Control, Fan			
	WEIGHT (kg)	5.1			

Derating Curve For Ambient

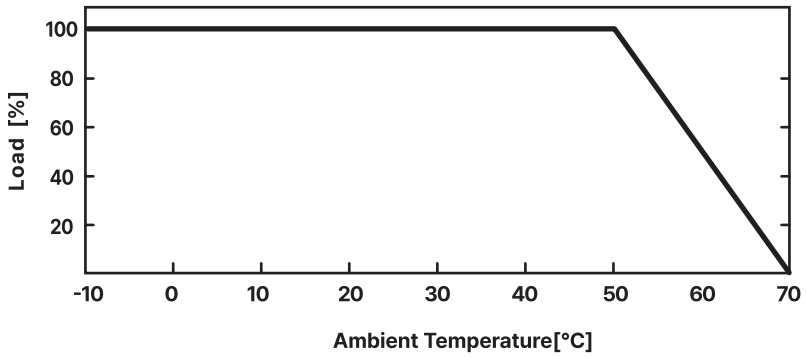

Derating Curve For Input Voltage

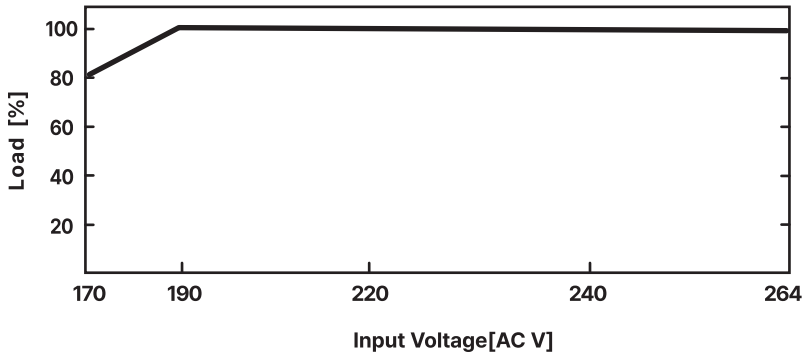

Dimension

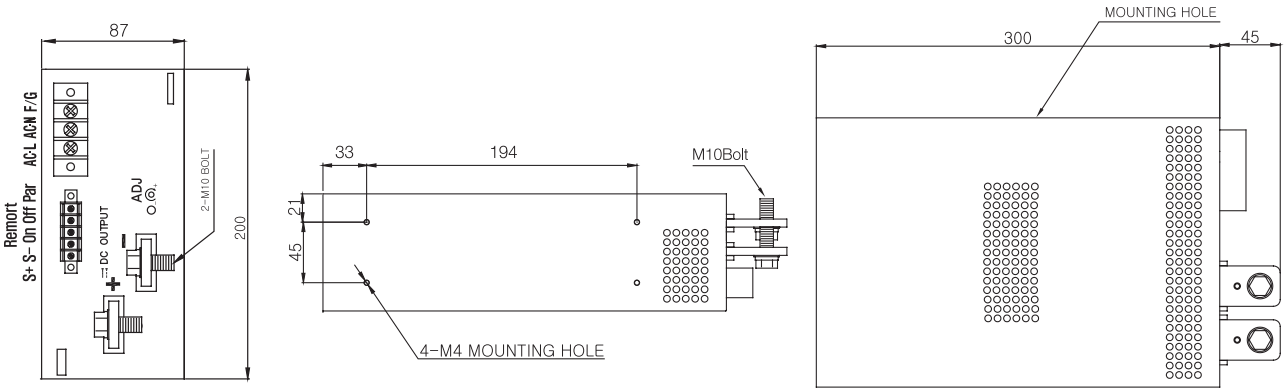

스위칭 전원장치

Switching Mode Power Supply(SMPS)

2, 3 Chanel Type







2 Chanel
- 15W
- 30W
- 50W
- 75W

3 Chanel
- 15W
- 30W
- 50W

SP Series 2CH-15W

CE RoHS



Features

- Input Voltage Range (AC90~264V)
- Built-in Inrush Current Limitter
- Over Current Protection
- Short Circuit Protection
- Over Temperature Protection
- Auto-Remote Mode

Specifications

ITEM \ MODEL		WYSP-15D05A WYSP-15D05B		WYSP-15D0512A WYSP-15D0512B		WYSP-15D0524A WYSP-15D0524B		WYSP-15D12A WYSP-15D12B		WYSP-15D15A WYSP-15D15B	
INPUT	VOLTAGE	110VAC...0.4A/220VAC...0.2A(Full Load) FREE VOLTAGE									
	FREQUENCY	50/60Hz(47~440Hz or DC)									
	EFFICIENCY	65% typ		65% typ		65% typ		65% typ		65% typ	
	INRUSHCURRENT	110VAC...14A/220VAC...28A (Io=100%, Ta=25°C at cold start)									
OUTPUT CIRCUIT	VOLTAGE (V)	5	9	5	12	5	24	12	12	15	15
	CURRENT (A)	2.0	0.5	2.0	0.5	2.0	0.5	0.7	0.5	0.5	0.5
	REGULATION LINE (mV)	25Max	45Max	25Max	60Max	25Max	120Max	60Max	60Max	75Max	75Max
	REGULATION LOAD (mV)	50Max	90Max	50Max	120Max	50Max	240Max	120Max	120Max	150Max	150Max
	RIPPLE (mVp-p)	50Max	90Max	50Max	120Max	50Max	240Max	120Max	120Max	150Max	150Max
	RIPPLE NOISE (mVp-p)	100Max	140Max	100Max	170Max	100Max	290Max	170Max	170Max	200Max	200Max
	TEMPERATURE DRIFT 0 ~ 50°C (mV)	50Max	90Max	50Max	120Max	50Max	240Max	120Max	120Max	150Max	150Max
	RISE TIME (mS)	100Max (AC IN 85V Io=100%)									
	HOLDING TIME (mS)	10typ (AC IN 85V Io=100%)									
PROTECTION CIRCUIT	OVER CURRENT PROTECTION	Works at over 110% of rating and recovers automatically									
	OVER VOLTAGE PROTECTION	-									
ELECTRICALLY ISOLATED	INPUT-OUTPUT	AC 1,500V 1minute, DC 500V 100MΩ (At room temperature & Humidity)									
	INPUT-CASE.FG	AC 1,500V 1minute, DC 500V 100MΩ (At room temperature & Humidity)									
	OUTPUT-CASE	AC 500V 1minute, DC 500V 100MΩ (At room temperature & Humidity)									
ENVIRONMENT	OPERATING TEMP.AND HUMID	0 ~ +50°C, 20 ~ 90% RH (Non Condensing)									
	STORAGE TEMP. AND HUMID	-20 ~ +75°C, 20 ~ 90% RH (Non Condensing)									
GENERAL	COOLING	Natural cooling									
	FUNCTION	-									
	WEIGHT (kg)	0.3									

SP Series 2CH-15W

CE RoHS

Derating Curve For Ambient

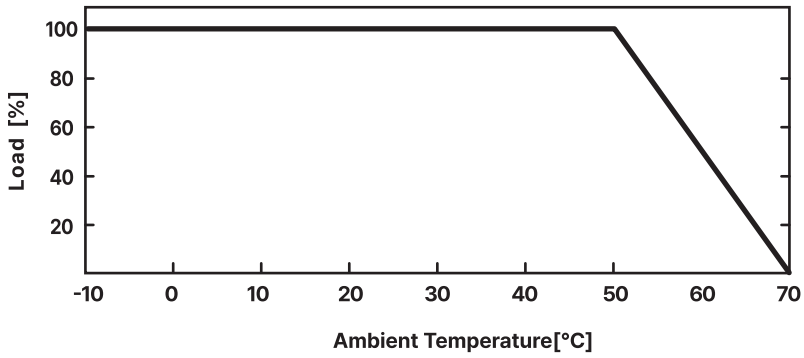

Derating Curve For Input Voltage

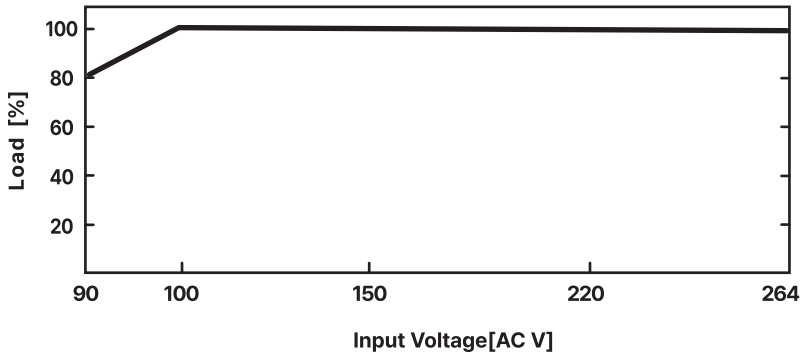

Dimension

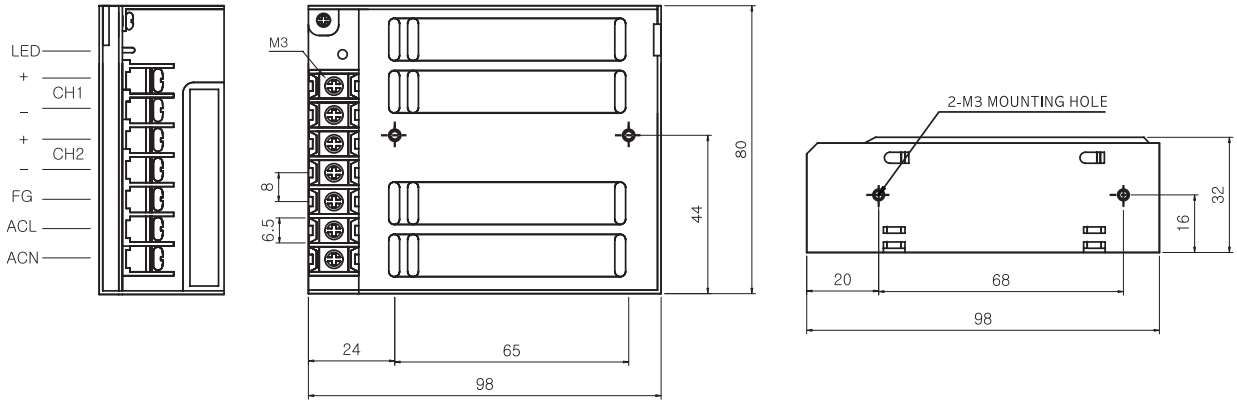

Terminal

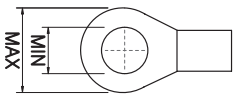

Max 6 , Min 3

SP Series 2CH-30W

CE RoHS



Features

- Input Voltage Range (AC90~264V)
- Built-in Inrush Current Limitter
- Over Current Protection
- Short Circuit Protection
- Over Temperature Protection
- Auto-Remote Mode

Specifications

ITEM \ MODEL		WYSP-30D05A WYSP-30D05B		WYSP-30D0512A WYSP-30D0512B		WYSP-30D0524A WYSP-30D0524B		WYSP-30D12A WYSP-30D12B		WYSP-30D15A WYSP-30D15B	
INPUT	VOLTAGE	110VAC...0.6A/220VAC...0.3A(Full Load)									
	FREQUENCY	50/60Hz(47~440Hz or DC)									
	EFFICIENCY	65% typ		70% typ		75% typ		65% typ		70% typ	
	INRUSHCURRENT	110VAC...4.5A/220VAC...9A (Io=100%, Ta=25°C at cold start)									
OUTPUT CIRCUIT	VOLTAGE (V)	5	9	5	12	5	24	12	12	15	15
	CURRENT (A)	3.0	1.6	3.0	1.2	3.0	0.6	1.2	1.2	1.0	1.0
	REGULATION LINE (mV)	25Max	45Max	25Max	60Max	25Max	120Max	60Max	60Max	75Max	75Max
	REGULATION LOAD (mV)	50Max	90Max	50Max	120Max	50Max	240Max	120Max	120Max	150Max	150Max
	RIPPLE (mVp-p)	50Max	90Max	50Max	120Max	50Max	240Max	120Max	120Max	150Max	150Max
	RIPPLE NOISE (mVp-p)	100Max	140Max	100Max	170Max	100Max	290Max	170Max	170Max	200Max	200Max
	TEMPERATURE DRIFT 0 ~ 50°C (mV)	50Max	90Max	50Max	120Max	50Max	240Max	120Max	120Max	150Max	150Max
	RISE TIME (mS)	100Max (AC IN 85V Io=100%)									
	HOLDING TIME (mS)	10typ (AC IN 85V Io=100%)									
PROTECTION CIRCUIT	OVER CURRENT PROTECTION	Works at over 110% of rating and recovers automatically									
	OVER VOLTAGE PROTECTION	-									
ELECTRICALLY ISOLATED	INPUT-OUTPUT	AC 1,500V 1minute, DC 500V 100MΩ (At room temperature & Humidity)									
	INPUT-CASE.FG	AC 1,500V 1minute, DC 500V 100MΩ (At room temperature & Humidity)									
	OUTPUT-CASE	AC 500V 1minute, DC 500V 100MΩ (At room temperature & Humidity)									
ENVIRONMENT	OPERATING TEMP.AND HUMID	0 ~ +50°C, 20 ~ 90% RH (Non Condensing)									
	STORAGE TEMP. AND HUMID	-20 ~ +75°C, 20 ~ 90% RH (Non Condensing)									
GENERAL	COOLING	Natural cooling									
	FUNCTION	-									
	WEIGHT (kg)	0.4									

SP Series 2CH-30W

CE RoHS

Derating Curve For Ambient

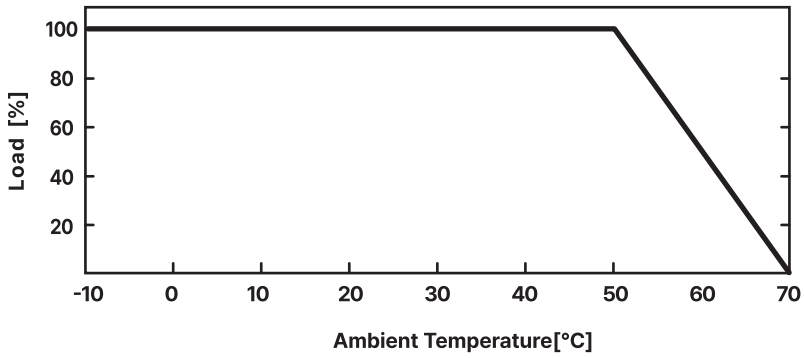

Derating Curve For Input Voltage

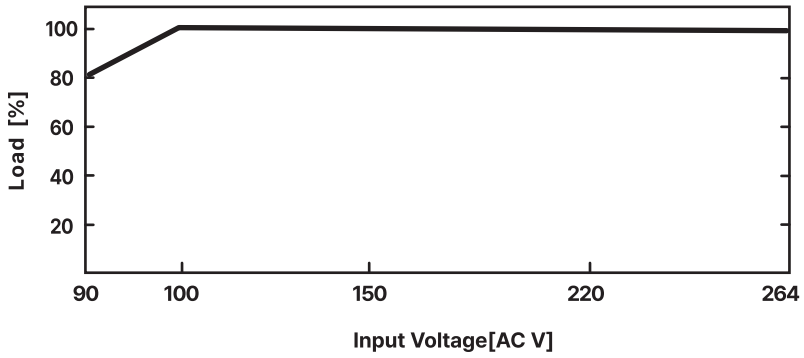

Dimension

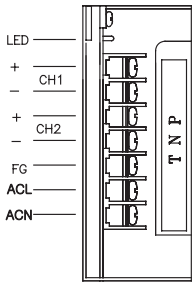

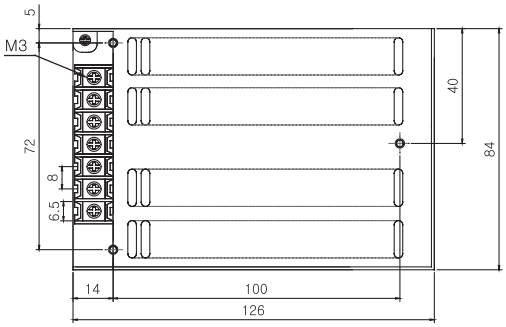

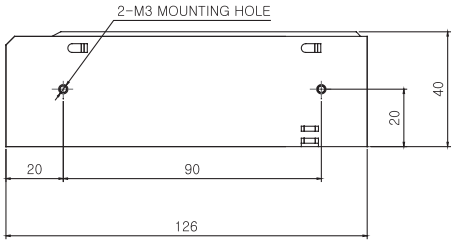

Terminal

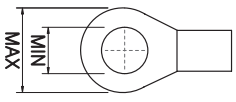

Max 6 , Min 3

SP Series 2CH-50W

CE RoHS



Features

- Input Voltage Range (AC90~264V)
- Built-in Inrush Current Limitter
- Over Current Protection
- Short Circuit Protection
- Over Temperature Protection
- Auto-Remote Mode

Specifications

ITEM \ MODEL		WYSP-50D05A WYSP-50D05B		WYSP-50D0512A WYSP-50D0512B		WYSP-50D0524A WYSP-50D0524B		WYSP-50D12A WYSP-50D12B		WYSP-50D15A WYSP-50D15B	
INPUT	VOLTAGE	110VAC...1.2A/220VAC...0.6A(Full Load)									
	FREQUENCY	50/60Hz(47~440Hz or DC)									
	EFFICIENCY	65% typ		70% typ		70% typ		70% typ		70% typ	
	INRUSHCURRENT	110VAC...6.8A/220VAC...13.5A (Io=100%, Ta=25°C at cold start)									
OUTPUT CIRCUIT	VOLTAGE (V)	5	9	5	12	5	24	12	12	15	15
	CURRENT (A)	5.0	2.7	3.0	3.0	3.0	1.5	2.0	2.0	1.6	1.6
	REGULATION LINE (mV)	25Max	45Max	25Max	60Max	25Max	120Max	60Max	60Max	75Max	75Max
	REGULATION LOAD (mV)	50Max	90Max	50Max	120Max	50Max	240Max	120Max	120Max	150Max	150Max
	RIPPLE (mVp-p)	50Max	90Max	50Max	120Max	50Max	240Max	120Max	120Max	150Max	150Max
	RIPPLE NOISE (mVp-p)	100Max	140Max	100Max	170Max	100Max	290Max	170Max	170Max	200Max	200Max
	TEMPERATURE DRIFT 0 ~ 50°C (mV)	50Max	90Max	50Max	120Max	50Max	240Max	120Max	120Max	150Max	150Max
	RISE TIME (mS)	100Max (AC IN 85V Io=100%)									
	HOLDING TIME (mS)	10typ (AC IN 85V Io=100%)									
PROTECTION CIRCUIT	OVER CURRENT PROTECTION	Works at over 110% of rating and recovers automatically									
	OVER VOLTAGE PROTECTION	-									
ELECTRICALLY ISOLATED	INPUT-OUTPUT	AC 1,500V 1minute, DC 500V 100MΩ (At room temperature & Humidity)									
	INPUT-CASE.FG	AC 1,500V 1minute, DC 500V 100MΩ (At room temperature & Humidity)									
	OUTPUT-CASE	AC 500V 1minute, DC 500V 100MΩ (At room temperature & Humidity)									
ENVIRONMENT	OPERATING TEMP.AND HUMID	0 ~ +50°C, 20 ~ 90% RH (Non Condensing)									
	STORAGE TEMP. AND HUMID	-20 ~ +75°C, 20 ~ 90% RH (Non Condensing)									
GENERAL	COOLING	Natural cooling									
	FUNCTION	-									
	WEIGHT (kg)	0.5									

SP Series 2CH-50W

CE RoHS

Derating Curve For Ambient

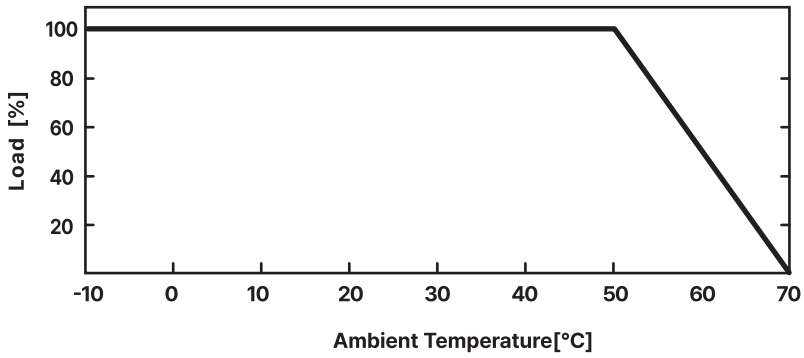

Derating Curve For Input Voltage

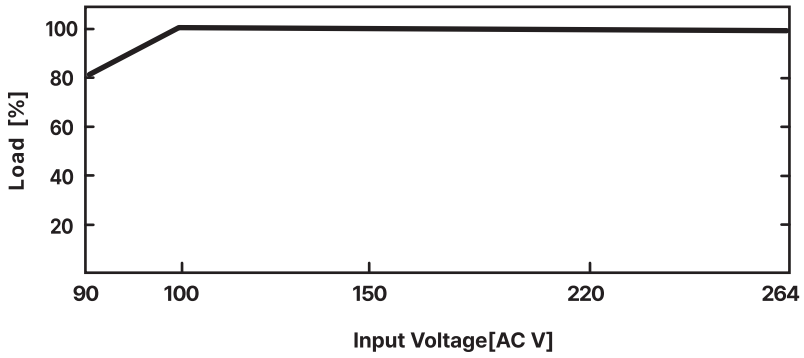

Dimension

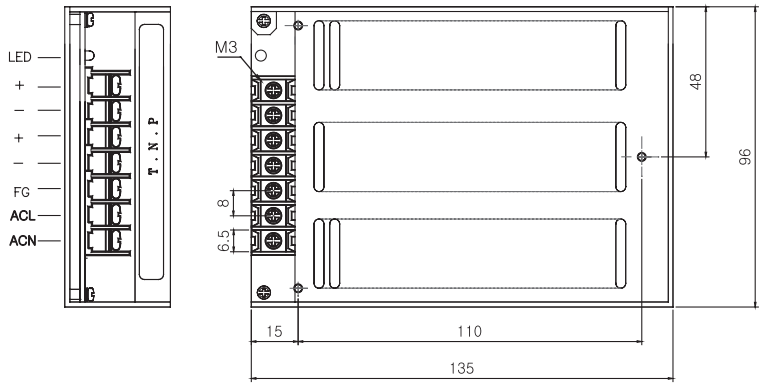

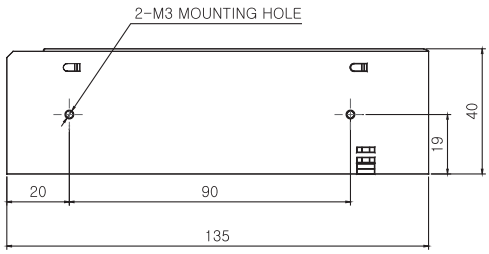

Terminal

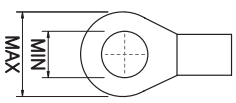

Max 6 , Min 3

SP Series 2CH-75W

CE RoHS



Features

- Input Voltage Range (AC90～264V)
- Built－in Inrush Current Limitter
- Over Current Protection
- Short Circuit Protection
- Over Temperature Protection
- Auto－Remote Mode

Specifications

ITEM \ MODEL		WYSP－75D05A WYSP－75D05B		WYSP－75D0512A WYSP－75D0512B		WYSP－75D0524A WYSP－75D0524B		WYSP－75D12A WYSP－75D12B		WYSP－75D15A WYSP－75D15B	
INPUT	VOLTAGE	110VAC...1.2A/220VAC...0.6A(Full Load)									
	FREQUENCY	50/60Hz(47～440Hz or DC)									
	EFFICIENCY	65% typ		75% typ		75% typ		70% typ		70% typ	
	INRUSHCURRENT	110VAC...6.8A/220VAC...13.5A (Io=100%, Ta=25°C at cold start)									
OUTPUT CIRCUIT	VOLTAGE (V)	5	9	5	12	5	24	12	12	15	15
	CURRENT (A)	7.5	4.0	5.0	4.0	3.0	2.5	3.1	3.1	2.5	2.5
	REGULATION LINE (mV)	25Max	45Max	20Max	48Max	20Max	96Max	60Max	60Max	75Max	75Max
	REGULATION LOAD (mV)	50Max	90Max	40Max	100Max	40Max	150Max	120Max	120Max	150Max	150Max
	RIPPLE (mVp－p)	50Max	90Max	80Max	160Max	80Max	240Max	120Max	120Max	150Max	150Max
	RIPPLE NOISE (mVp－p)	100Max	140Max	120Max	150Max	120Max	180Max	170Max	170Max	200Max	200Max
	TEMPERATURE DRIFT 0 ～ 50°C (mV)	50Max	90Max	50Max	120Max	50Max	240Max	120Max	120Max	150Max	150Max
	RISE TIME (mS)	200Max (AC IN 85V Io=100%)									
	HOLDING TIME (mS)	10typ (AC IN 85V Io=100%)									
PROTECTION CIRCUIT	OVER CURRENT PROTECTION	Works at over 110% of rating and recovers automatically									
	OVER VOLTAGE PROTECTION	–									
ELECTRICALLY ISOLATED	INPUT－OUTPUT	AC 1,500V 1minute, DC 500V 100MΩ (At room temperature & Humidity)									
	INPUT－CASE.FG	AC 1,500V 1minute, DC 500V 100MΩ (At room temperature & Humidity)									
	OUTPUT－CASE	AC 500V 1minute, DC 500V 100MΩ (At room temperature & Humidity)									
ENVIRONMENT	OPERATING TEMP.AND HUMID	0 ～ +50°C, 20 ～ 90% RH (Non Condensing)									
	STORAGE TEMP. AND HUMID	−20 ～ +75°C, 20 ～ 90% RH (Non Condensing)									
GENERAL	COOLING	Natural cooling									
	FUNCTION	–									
	WEIGHT (kg)	0.6									

SP Series 2CH-75W

CE RoHS

Derating Curve For Ambient

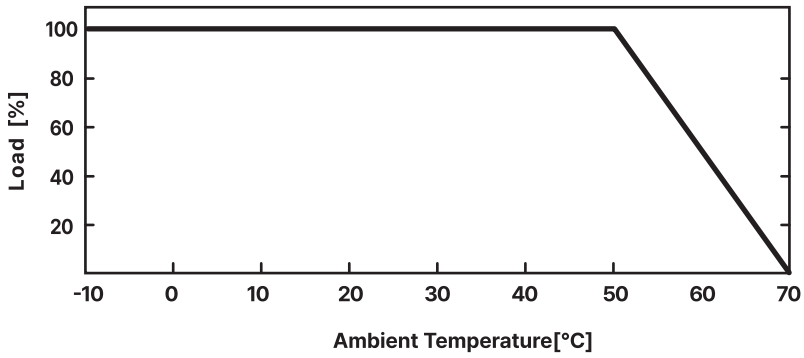

Derating Curve For Input Voltage

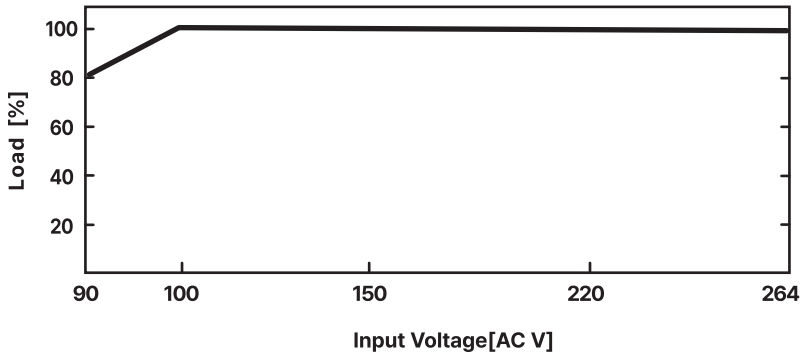

Dimension

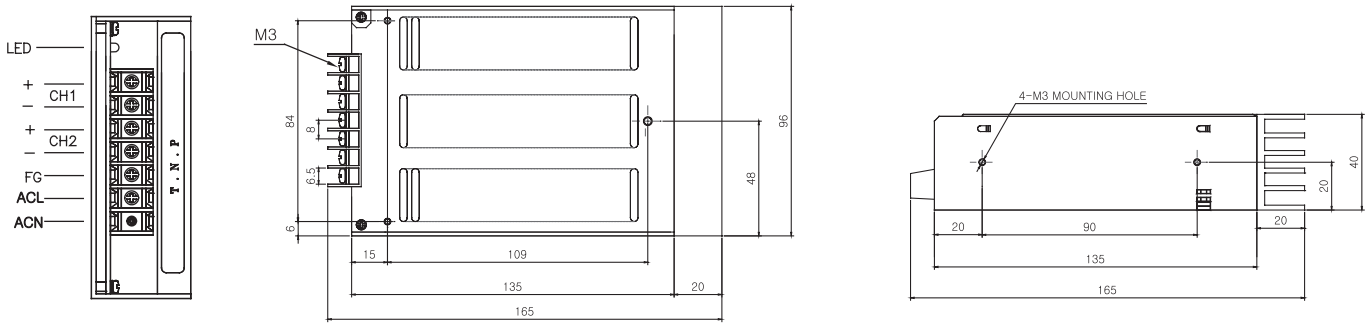

Terminal

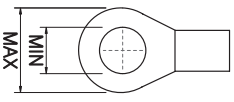

Max 6 , Min 3

SP Series 3CH-15W

CE RoHS



Features

- Input Voltage Range (AC80~264V)
- Built-in Inrush Current Limitter
- Over Current Protection
- Short Circuit Protection
- Over Temperature Protection
- Auto-Remote Mode

Specifications

ITEM \ MODEL		WYSP-15T12A WYSP-15T12B			WYSP-15T15A WYSP-15T15B		
INPUT	VOLTAGE	110VAC...0.4A/220VAC...0.2A(Full Load)					
	FREQUENCY	50/60Hz(47~440Hz or DC)					
	EFFICIENCY	60% typ					
	INRUSHCURRENT	110VAC...14A/220VAC...28A (Io=100%, Ta=25°C at cold start)					
OUTPUT CIRCUIT	VOLTAGE (V)	DC 5	DC 12	DC -12	DC 5	DC 15	DC -15
	CURRENT (A)	2.0	0.3	0.2	2.0	0.3	0.2
	REGULATION LINE (mV)	25Max	60Max	60Max	25Max	75Max	75Max
	REGULATION LOAD (mV)	50Max	120Max	120Max	50Max	150Max	150Max
	RIPPLE (mVp-p)	50Max	120Max	120Max	50Max	150Max	150Max
	RIPPLE NOISE (mVp-p)	100Max	170Max	170Max	100Max	200Max	200Max
	TEMPERATURE DRIFT 0 ~ 50°C (mV)	50Max	120Max	120Max	50Max	150Max	150Max
	RISE TIME (mS)	100Max (AC IN 85V Io=100%)					
	HOLDING TIME (mS)	10typ (AC IN 85V Io=100%)					
PROTECTION CIRCUIT	OVER CURRENT PROTECTION	Works at over 110% of rating and recovers automatically					
	OVER VOLTAGE PROTECTION	-					
ELECTRICALLY ISOLATED	INPUT-OUTPUT	AC 1,500V 1minute, DC 500V 100MΩ (At room temperature & Humidity)					
	INPUT-CASE.FG	AC 1,500V 1minute, DC 500V 100MΩ (At room temperature & Humidity)					
	OUTPUT-CASE	AC 500V 1minute, DC 500V 100MΩ (At room temperature & Humidity)					
ENVIRONMENT	OPERATING TEMP.AND HUMID	0 ~ +50°C, 20 ~ 90% RH (Non Condensing)					
	STORAGE TEMP. AND HUMID	-20 ~ +75°C, 20 ~ 90% RH (Non Condensing)					
GENERAL	COOLING	Natural cooling					
	FUNCTION	-					
	WEIGHT (kg)	0.3					

SP Series 3CH-15W

CE RoHS

Derating Curve For Ambient

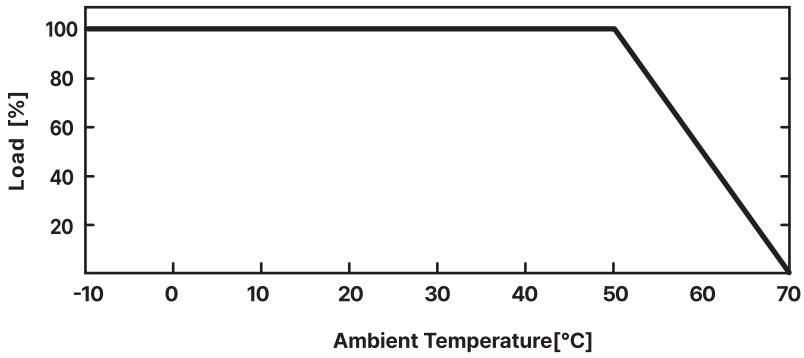

Derating Curve For Input Voltage

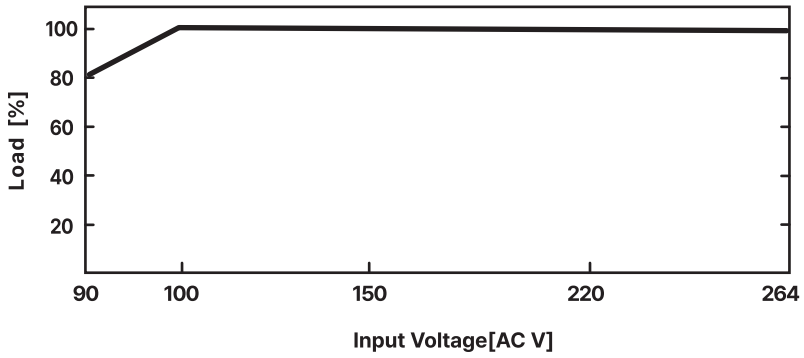

Dimension

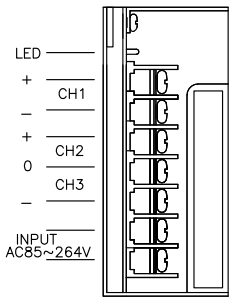

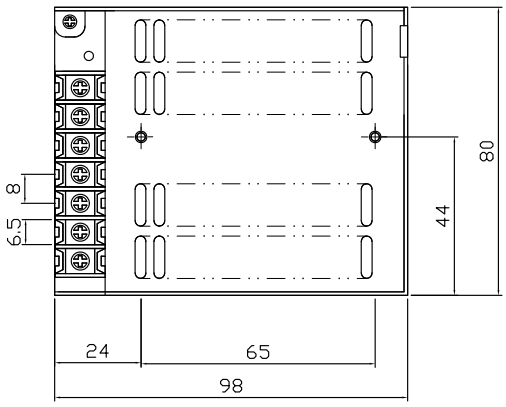

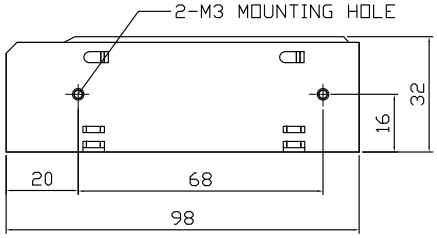

Terminal

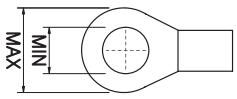

Max 6 , Min 3

SP Series 3CH-30W

CE RoHS



Features

- Input Voltage Range (AC80~264V)
- Built-in Inrush Current Limitter
- Over Current Protection
- Short Circuit Protection
- Over Temperature Protection
- Auto-Remote Mode

Specifications

ITEM \ MODEL		WYSP-30T12A WYSP-30T12B			WYSP-30T15A WYSP-30T15B		
INPUT	VOLTAGE	110VAC...0.6A/220VAC...0.3A(Full Load)					
	FREQUENCY	50/60Hz(47~440Hz or DC)					
	EFFICIENCY	65% typ			70% typ		
	INRUSHCURRENT	110VAC...4.5A/220VAC...9A (Io=100%, Ta=25°C at cold start)					
OUTPUT CIRCUIT	VOLTAGE (V)	DC 5	DC 12	DC -12	DC 5	DC 15	DC -15
	CURRENT (A)	3.0	1.0	0.3	3.0	0.8	0.2
	REGULATION LINE (mV)	25Max	60Max	60Max	25Max	75Max	75Max
	REGULATION LOAD (mV)	50Max	120Max	120Max	50Max	150Max	150Max
	RIPPLE (mVp-p)	50Max	120Max	120Max	50Max	150Max	150Max
	RIPPLE NOISE (mVp-p)	100Max	170Max	170Max	100Max	200Max	200Max
	TEMPERATURE DRIFT 0 ~ 50°C (mV)	50Max	120Max	120Max	50Max	150Max	150Max
	RISE TIME (mS)	100Max (AC IN 85V Io=100%)					
	HOLDING TIME (mS)	10typ (AC IN 85V Io=100%)					
PROTECTION CIRCUIT	OVER CURRENT PROTECTION	Works at over 110% of rating and recovers automatically					
	OVER VOLTAGE PROTECTION	-					
ELECTRICALLY ISOLATED	INPUT-OUTPUT	AC 1,500V 1minute, DC 500V 100MΩ (At room temperature & Humidity)					
	INPUT-CASE.FG	AC 1,500V 1minute, DC 500V 100MΩ (At room temperature & Humidity)					
	OUTPUT-CASE	AC 500V 1minute, DC 500V 100MΩ (At room temperature & Humidity)					
ENVIRONMENT	OPERATING TEMP.AND HUMID	0 ~ +50°C, 20 ~ 90% RH (Non Condensing)					
	STORAGE TEMP. AND HUMID	-20 ~ +75°C, 20 ~ 90% RH (Non Condensing)					
GENERAL	COOLING	Natural cooling					
	FUNCTION	-					
	WEIGHT (kg)	0.4					

SP Series 3CH-30W

CE RoHS

Derating Curve For Ambient

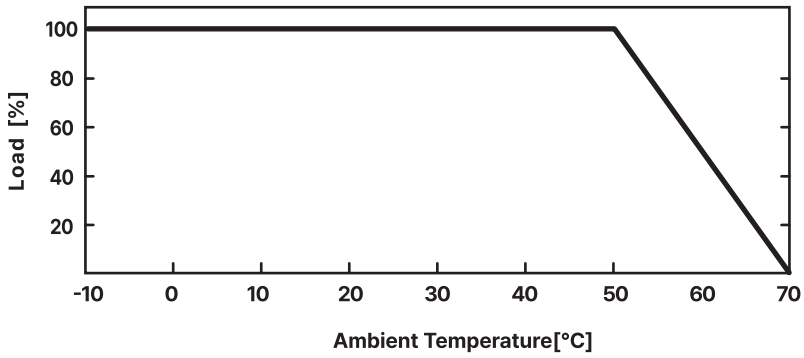

Derating Curve For Input Voltage

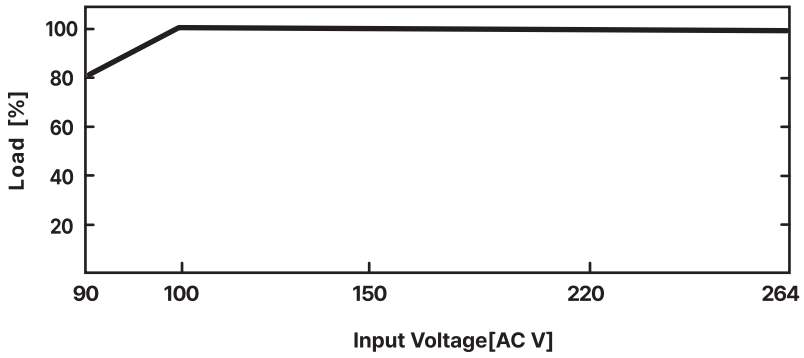

Dimension

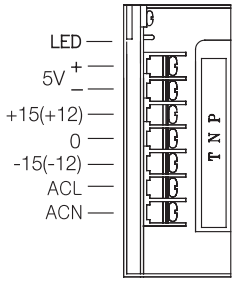

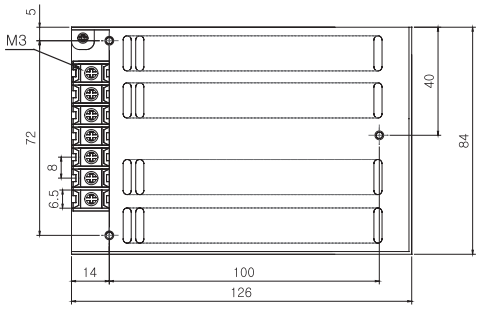

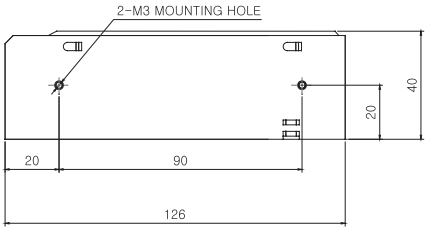

Terminal

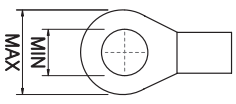

Max 6 , Min 3

SP Series 3CH-50W

CE RoHS



Features

- Input Voltage Range (AC80~264V)
- Built-in Inrush Current Limitter
- Over Current Protection
- Short Circuit Protection
- Over Temperature Protection
- Auto-Remote Mode

Specifications

ITEM \ MODEL		WYSP-50T12A WYSP-50T12B			WYSP-50T15A WYSP-50T15B		
INPUT	VOLTAGE	110VAC...1.2A/220VAC...0.6A(Full Load)					
	FREQUENCY	50/60Hz(47~440Hz or DC)					
	EFFICIENCY	65% typ			70% typ		
	INRUSHCURRENT	110VAC...6.8A/220VAC...13.5A (Io=100%, Ta=25°C at cold start)					
OUTPUT CIRCUIT	VOLTAGE (V)	DC 5	DC 12	DC -12	DC 5	DC 15	DC -15
	CURRENT (A)	5.0	1.8	0.3	3.0	1.4	0.3
	REGULATION LINE (mV)	25Max	60Max	60Max	25Max	75Max	75Max
	REGULATION LOAD (mV)	50Max	120Max	120Max	50Max	150Max	150Max
	RIPPLE (mVp-p)	50Max	120Max	120Max	50Max	150Max	150Max
	RIPPLE NOISE (mVp-p)	100Max	170Max	170Max	100Max	200Max	200Max
	TEMPERATURE DRIFT 0 ~ 50°C (mV)	50Max	120Max	120Max	50Max	150Max	150Max
	RISE TIME (mS)	100Max (AC IN 85V Io=100%)					
	HOLDING TIME (mS)	10typ (AC IN 85V Io=100%)					
PROTECTION CIRCUIT	OVER CURRENT PROTECTION	Works at over 110% of rating and recovers automatically					
	OVER VOLTAGE PROTECTION	-					
ELECTRICALLY ISOLATED	INPUT-OUTPUT	AC 1,500V 1minute, DC 500V 100MΩ (At room temperature & Humidity)					
	INPUT-CASE.FG	AC 1,500V 1minute, DC 500V 100MΩ (At room temperature & Humidity)					
	OUTPUT-CASE	AC 500V 1minute, DC 500V 100MΩ (At room temperature & Humidity)					
ENVIRONMENT	OPERATING TEMP.AND HUMID	0 ~ +50°C, 20 ~ 90% RH (Non Condensing)					
	STORAGE TEMP. AND HUMID	-20 ~ +75°C, 20 ~ 90% RH (Non Condensing)					
GENERAL	COOLING	Natural cooling					
	FUNCTION	-					
	WEIGHT (kg)	0.5					

SP Series 3CH-50W

CE RoHS

Derating Curve For Ambient

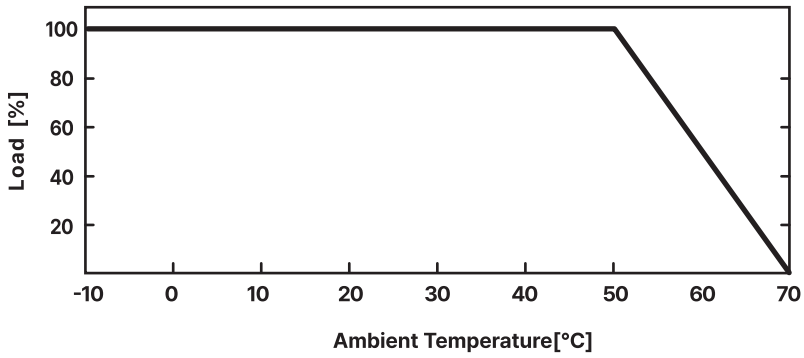

Derating Curve For Input Voltage

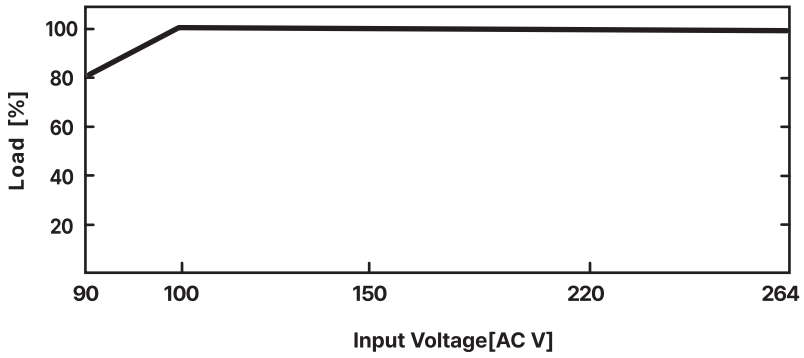

Dimension

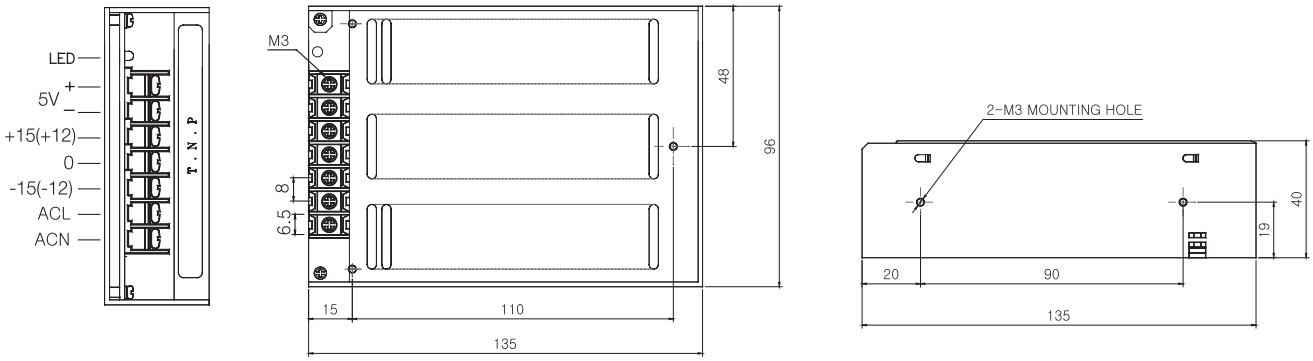

Terminal

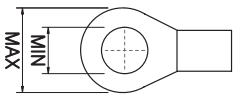

Max 6 , Min 3

병렬형 다이오드 모듈 Diode Module

CE RoHS



Features

- Dual Input with Single Output
- DC 5 ~ 48V Wide range Input
- Full Power Between −25°C and +65°C
- 2 Mounting Method : Din Rail & Screw

Specifications

ITEM \ MODEL	WYRM − 25
INPUT VOLTAGE (V)	5 ~ 48
INPUT CURRENT (A)	25
OUTPUT CURRNET (A)	25
OPERATING TEMPERATURE (°C)	−25°C ~ +65°C

※기타용량은 주문에 의함.

Circuit Diagram

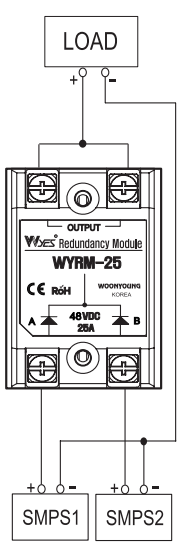

※ 25A 이하 x 1개사용

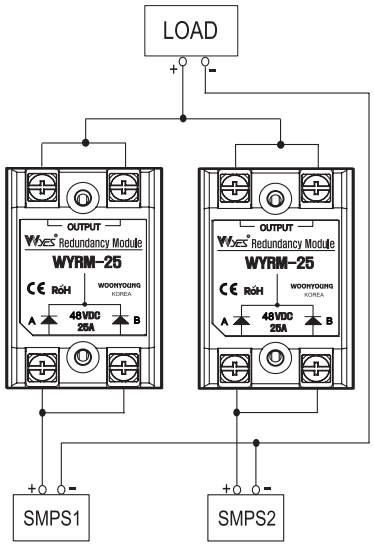

※ 25A ~50A 이하 x 2개사용

Dimension

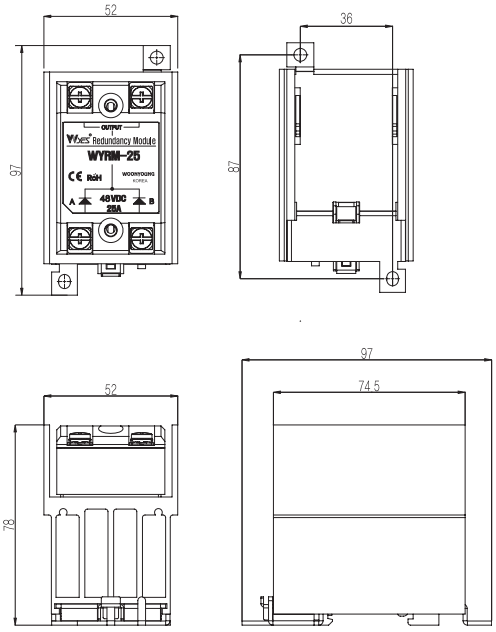

밧데리 자동충전기
Automatic Battery Charger



DC 12V, 24V / 5A, 10A ····· 520

● 균등충전 Equalizing Charge
● 부등충전 Floating Charge

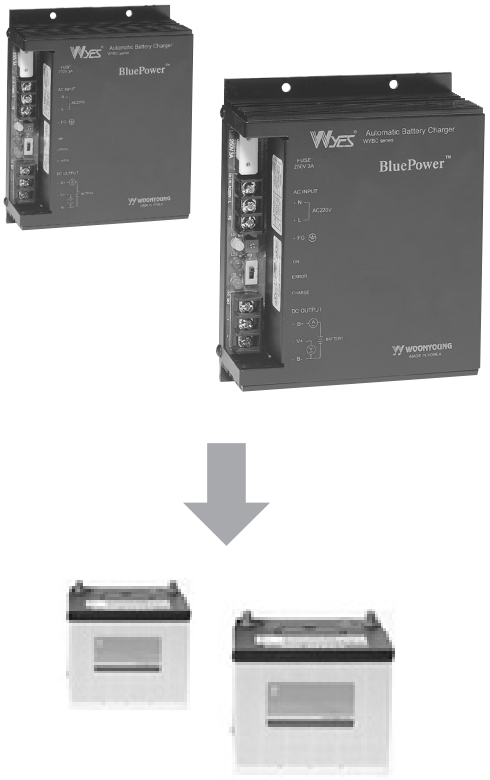

● Specification

ITEM \ MODEL		WYBC60S12A(5A) WYBC120S12A(10A)	WYBC120S24A(5A) WYBC240S24A(10A)
OUTPUT		12VDC	24VDC
AUX POWER		AC 220V (200~265V) 50/60Hz	
RATING(A)		5A, 10A	5A, 10A
PHASE		1 PHASE	
CHARPING METHOD		Semiconductor Controlling Method	
COOLING METHOD		Natural cooling	
CONTROL METHOD		Automatic, Constant Voltage Constant Current	
EFFICIENCY		More than 70%	
VOLTAGE SETTING	FLOATING CHARGE	13.2VDC	26.4VDC
	EQUALIZING CHARGE	14.4VDC	28.8VDC
VOLTAGE VARIABLE RANGE	FLOATING CHARGE	13.2V(12~14V)	26.4V(24~28V)
	EQUALIZING CHARGE	14.4V(13~15V)	28.8V(26~30V)
ADJUSTMENT RANGE OF CHARGING CURRENTS		Under 20% out of Rated Currents	
OVER CHARGE TIME		2 Hours at 120% of Rated Voltage	
INSULATION TEST		DC 500V Megger 10MΩ	
WITHSTANDING VOLTAGE TEST		1500V AC. 1/min	
VIBRATION TEST		Thrust Range 0.75mm An Hour for Each Diraction of X, Y, Z	
SHOCK TEST		3 Times for Each Direction of X, Y, Z	
OPERATING TEMP.		0 ~ 50°C	
OPERATING HUMIDITY		35 ~ 85%RH	
STORAGE TEMP.		−25 ~ 65°C(With noicing)	
WEIGHT		1 kg	

※ 상기 제품은 과충전 방지 회로가 적용되어 있습니다.

● 각부 명칭 Front Panel Featuring

① 제품고정용 Hole
② Fuse (AC250V/3A) 20mm
③ AC Input AC220V
④ 충전기 상태표시램프
ON - 적색등 : 부동충전시 점등
녹색등 : 균등충전시에 점등
ERROR - 적색등 : 축전지를 충전기에
역극성 연결시 점등
CHARGE - 녹색등 : 축전지를 정확히 연결하고
충전시 점등
⑤ 충전전압 가변용 보륨 (출하시 최적상태로 설정)
⑥ 충전방법 전환 스위치(부동충전/균등충전)
⑦ 충전할 축전지 연결단자
⑧ 외함 방열판
⑨ 라벨
⑩ S1 CHARGE MODE 라벨

① Mounting Hole
② Fuse (AC250V/3A) 20mm
③ Power Voltage Input Terminal AC220V
④ Display Lamp on the Charger
ON - Red Light : Floating Charge
Green Light : Equalizing Charge
ERROR- Red Light : Reverse connection
of a battery into a charger
CHARGE-Green Light: Correct connection of
a battery into a charger; currently
being charged
⑤ Variable V.R for Charging Voltage (Set at an optimal state when factory)
⑥ Charging Method change Switch (Floating/Equalizing Mode)
⑦ Connecting Terminal for a Battery for Charging
⑧ Outside Heat Sink
⑨ Production Model I.D. Label
⑩ S1 CHARGE MODE Label

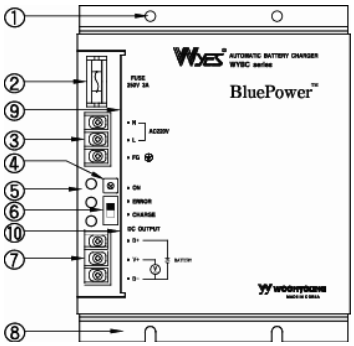

● 제품특징

1. 입력전원 표시 램프가 있다.
2. 축전지를 충전기 출력에 잘못 연결시, 충전기를 보호하고 오결선을 표시한다.
3. 입력전원과 축전지가 정확하게 연결되면 충전표시 램프가 점등된다
4. 축전지가 완전 방전되었어도 충전할 수 있는 단자를 갖추었다.
5. 균등, 부동 충전 전압을 현장에서 정확히 설정할 수 있다.
6. 리플전압이 낮아 다른 기기에 영향을 주지 않는다.
7. 충전방식 전환에 원터치 슬라이드 스위치를 적용하여 조작이 극히 간단하고, 결정된 충전방식을 2색LED로 정확히 표시 한다.

● 사용방법

1. 입력 전원을 AC INPUT N,L 단자에, 축전지를 DC OUTPUT B+, B- 단자에 각각 연결한다.
2. CONNECTION ERROR(적색) 램프가 점등되면 축전지의 극성이 바뀌었으므로 결선을 점검한다.
3. 입력전원과 축전지가 정확하게 연결되면 충전표시(녹색) 램프가 점등된다.
4. 충전 방식을 선택한다.
5. 초기 충전이나 3개월에 1회정도 약 10시간동안 균등충전을 하여 축전지 각 셀의 충전 불균형을 제거한다.
5. 필요시 VR2 가변저항을 조정하여 정밀하게 맞춘다. (공장에서 조정 출하됨)
6. 전류조정저항 : VR1- 정격전류 차의 ±20% 이하.
7. 축전지 전압이 낮아서 충전이 되지 않으면 V+ 단자에 축전지 "+"를 연결하여 충전하고, 완료되면 다시 B+단자로 옮겨놓는다.

-. 부동충전 (FLOATING MODE)
초충전 또는 활성화 충전이 끝난 고정연축전지를 축전지 및 부하를 병열로 회로를 구성하고 만충전된 축전지 개회로 전압보다 약간 높은 정전압으로 충전기에 설정하여 놓음으로서 축전지의 자기방전을 보상하여 정전되지 않은 상태라면 항상 만충전된 상태를 유지시켜주는 방식이다.(통상적인 충전위치)

-. 부동충전시 유의점
만일 부동충전전압이 너무 낮을 경우는 만충전상태를 유지하지 못하고 극판표면에 썰페이션을 일으켜 용량 감소가 일어나서 정전시 충분한 방전시간을 지속하지 못한다.

-. 균등충전 (EQUALIZED MODE)
부동충전으로 장기간 축전지를 운영하게되면 아무리 부동충전 전압을 이상적으로 설정하였다 하더라도 각 단전지간에 전압 및 비중이 균일하지 못하고 차이가 나게 된다. 이때 부동충전 전압보다 약간 높은 정전압으로 충분한 시간동안 충전해 줌으로써 전체cell의 전압 및 비중상태를 균등하게 되도록 하기 위한 충전 방식이다.

-. 균등충전 실시시기
1. 초충전 및 6개월에 1회 정도는 균등충전을 하여야 한다.
2. 년 1회정도는 불필요하더라도 실시한다.

-. 균등충전시 유의점
만일 균등충전중에 전해액 온도가 45도 이상으로 상승하면 균등충전을 중단하였다가 전해액이 냉각되면 다시 시작해야 한다.

● PRODUCT OUT LINE

1.There is a display lamp for input power.
2.If the battery is reverse connected to the charger, the charger will be automatically protected and will be turn on red lamp.
3.If the input voltage and the battery are connected correctly, the geeen lamp of charging will turn on.
4.Even if the battery is fully discharged, it has a terminal for another round of charging.
5.Equalizing, Floating Charging Voltage can be set precisely on the spot.
6.As the ripple voltage is lower, other equipment is rarely affected.
7.Operation is very simple by the application of one-touch slide switch built for change charging method; and the selected method is clearly indicated on the two-color LED.

● HOW to USE

1.Connect the input voltage into the AC INPUT N and L terminal while plug the battery into the DC OUTPUT B+ and B-.
2.If the red light of connection error is on, check the connected lines as it indicates the polarity of the battery is put on backwards.
3.If the input voltage and storage battery are correctly connected, the green light (charging) is on.
4.Select the charging method. Remove any charging imbalances found in the cell of a battery through initial charging or an equalizing charging for about 10 hours once every three months.
5.If necessary, set the currents with precision by adjusting the VR2 variable resistance. (Products are factory setting with the already adjusted currents.)
6.Current Adjustment Resistor : vr1-less than °æ20% of the rated current
7.If charging cannot be made due to a low voltage of a battery, try connect of the battery into V+ terminal. When charging is completed, move it back to B+ terminal.

-. FLOATING MODE
Initial chaged battery and load of a fixed footprint lead-acid battery the one that has been charged for the first time or done with active charge as a parallel circuit

While a charger is adjusted at a constant voltage a little bit higher than the one at the open circuit of a fully-charged battery. Thus, it compensates natural discharge of the battery. In other words, if there is no interruption of electric power, the battery is maintained as fully-charged all the time. (with a regular charger)

-. CAUTION WITH FLOATING CHARGE
If the voltage of floating charge is too low, it cannot be maintained as fully-charged. Furthermore, sulphation will occur on the surface of the plate. This leads to a reduction in weight, failing to sustain enough time for discharge during a power failure.

-. EQUALIZING MODE

When a battery is being run for a longer period of time under the condition of floating charge, voltages and their share between cells inevitably become unbalanced even if the voltage of floating charge has been ideally set. If this is the case, try to charge for enough amount of time with constant voltage set at a little bit higher than the charger voltage. Then the voltages and their share of the overall cells will be evenly charged.

-. WHEN to TRY EQUALIZING MODE

1. For initial charge and once every six months
2. Even if considered unnecessary, try once a year.

-. CAUTION WITH EQUALIZING CHARGE

If the temperature of electrolyte exceeds over 45°… during equalizing charge, stop the charge and re-try it after the electrolyte cools down.

Terminal Connection Diagram

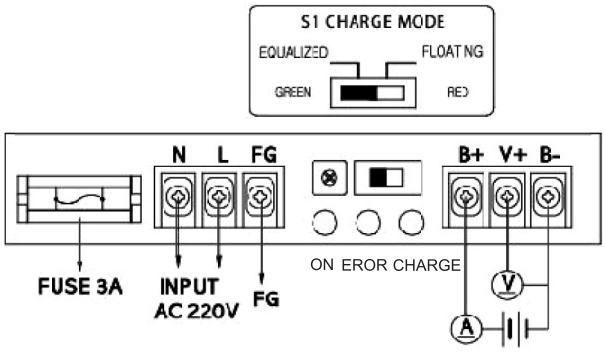

Dimension

