서지(낙뢰) 보호기

Surge Protective Device(SPD)

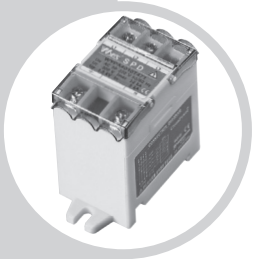

주문시 확인 승낙 사항

Items to be verified and approved when ordering products

운영 제품을 구입하는 고객 여러분께 !

저희 운영 제품을 애용해 주셔서 대단히 감사합니다.
본 카달로그에서 당사 제품을 주문하실 경우, 견적서, 계약서, 사양서 등에 특기사항이 없는 경우에는 다음의 적합 용도조건, 보증내용등을 적용합니다. 아래 내용을 확인하시고 승낙하신 후 주문해 주십시오.

1. 보증 내용

① 보증기간
당사 제품의 보증기간은 구입 후 또는 지정 장소 납입 후 1년으로 합니다.

② 보증 범위
상기 보증 기간 중에 당사측의 책임으로 당사 제품에 고장이 발생한 경우 대체품 제공 또는 수리를 제품 구입 장소에서 무상으로 실시합니다. 단, 고장의 원인이 다음에 해당하는 경우에는 이 보증 대상 범위에서 제외됩니다.

a) 본 카달로그 또는 사양서에 기재되어 있는 이외의 조건, 환경, 취급 및 사용에 의한 경우
b) 당사 제품 이외의 원인에 의한 경우
c) 당사 이외에 의한 개조 또는 수리에 의한 경우
d) 당사 제품의 본래 사용법 이외의 사용에 의한 경우
e) 당사 출하 당시의 과학, 기술 수준으로는 예측 할 수 없었던 경우
f) 기타 천재지변, 재해 등 당사측의 책임이 아닌 원인에 의한 경우

참고로 여기서의 보증은 당사 제품 단품의 보증을 의미하는 것이며, 당사 제품 고장에 의해 유발되는 손해는 보증 대상에서 제외됩니다.

2. 책임의 제한

① 당사 제품에 기인해 발생한 특별손해, 간접손해, 또는 소극적 손해에 대해 당사는 일체의 책임을 지지 않습니다.
② 프로그래밍 가능한 당사제품에 대해 당사 이외의 자가 실시한 프로그램 또는 그에 의해 발생한 결과에 대해 당사는 일체의 책임을 지지 않습니다.

3. 적합 용도의 조건

① 당사 제품을 다른 제품과 조합해서 사용하는 경우에 적합해야 할 규격, 법규 및 규제는 고객이 직접 확인해 주십시오.
또 고객이 사용하시는 시스템, 기계, 장치에 대한 당사제품의 적합성은 고객이 직접 확인해 주십시오.
이것이 실시되지 않는 경우 당사는 당사 제품의 적합성에 대해 책임을 지지 않습니다.

② 다음 용도에 사용하는 경우, 당사 영업 담당자와 상담하고 사양서 등을통해 확인하는 한편 정격, 성능에 대해 여유를 주거나 만일 고장이 발생해도 위험을 최소화 할 수 있는 안전 회로 등의 안전 대책을 2중으로 강구해 주십시오.

a) 실외, 잠재적인 화학적 오염 또는 전기적 방해를 받는 용도 또는 본 카탈로그에 기재되지 않는 조건이나 환경에서 사용.
b) 원자력 제어설비, 소각설비, 철도, 항공, 차량설비, 의료용 기계, 반도체 제조장비, 오락기계, 안전장치 및 행정 기관 이나 개별 업계의 규제에 따른 설비
c) 인명이나 재산에 위험이 미칠 수 있는 시스템, 기계, 장치
d) 가스, 수도, 전기의 공급 시스템, 24시간 연속 운전 시스템 등 높은 신뢰성이 필요한 설비
e) 자동차(2륜차 포함) 탑재 설비
f) 기타상기 a)~e) 에 준하며 고도의 안전성이 필요한 용도

③ 고객이 당사 제품을 인명이나 재산에 중대한 위험을 미치는 용도에 사용하는 경우에는 시스템 전체적으로 위험을 알리거나 여유 있는 설계에 의해 필요한 안전성을 확보할 수 있도록 설계되어 있는지 당사 제품이 전체적으로 의도한 용도에 적절히 배전, 설치 되어 있는지 반드시 고객이 직접 사전에 확인해 주십시오.
④ 본 카달로그에 기재되어 있는 용도는 참고용이므로 채택 시에는 기기, 장치의 기능과 안전성을 확인 한 후에 사용해 주십시오.
⑤ 당사 제품의 잘못된 사용으로 고객 또는 제 3자에게 예기치 않는 손해가 발생하지 않도록 사용상의 금지 사항 및 주의 사항을 완전히 숙지 한 후 반드시 지켜 주십시오.

4. 사양변경

본 카달로그에 기재된 제품의 사양 및 동봉품은 개선 또는 기타 사유에 의해 필요에 따라 변경될 수 있습니다.
당사 영업 담당자와 상담하고 당사 제품의 실제 사양을 확인해 주십시오.

5. 서비스의 범위

당사 제품의 가격에는 기술자 파견 등의 서비스 비용은 포함되어 있지 않습니다.
원하실 경우에는 당사 영업 담당자와 상담해 주십시오.

6. 적용 범위

상기 사항은 대한민국 내에서의 거래 및 사용을 전제로 합니다.
해외에서의 거래 및 사용에 대해서는 당사 영업 담당자와 사전에 상담해 주십시오.

Dear customers who purchase Woon Young products!

Thank you for purchasing Woon Young products.
If there is no particular information on estimates, contracts or specifications when you order products from this catalog, the following conditions of use and warranty shall apply. Please place orders after you read and approve the following items.

1. Content of Warranty

① Warranty period
The warranty period of this product shall be 1 year from the date of purchase or from the day the product is delivered to a designated place.

② Scope of warranty
If failure occurs due to reasons attributable to this company during the above-said warranty period, this company will provide substitute products or repair the product free of charge at the place of purchase. However, if the cause of failure is one of the following, it shall be excluded from being eligible for warranty benefits.

a) Products were handled or used under the conditions and environmnt not entered in this catalog or in specification.
b) Failure occurred due to reasons other than those caused by this product.
c) Failure occurred due to modification or repairs performed by persons other than this company.
d) Failure occurred because the product was used based on the method other than the original usage of this product.
e) Failure was not expected by the scientific and technical levels prevailing at the time of shipment.
f) Failure occurred due to causes beyond the control of this company, e.g. natural disasters and accidents.

Warranty as specified herein means the warranty covering only the product of this company, and any damage caused by the failure of this product shall be excluded from being eligible for warranty coverage.

2. Limitations on responsibility

① This company shall not be held liable whatsoever for any special damage, indirect damage or passive damage caused by this product of this company.
② This company shall not be held liable whatsoever for any programming performed by persons other than this company on the programmable products or for the results of such programming.

3. Conditions of compatibility

① Please check the standards, laws and regulations applicable when this product is used in combination with other products.
In addition, be sure to check the compatibility of this product covering the systems, machines and devices used by you.
If you fail to take actions as above, this company shall not be held liable for the compatibility of the product.

② If the product is used for the following purposes, discuss details with the sales manager of this company based on the provided specifications. At the same time, allow sufficient rating and performance, or take appropriate safety measures through the safety circuits that can minimize risks even if failure occurs.

a) Using the product outside or under environment exposed to potential chemical pollution or electric interference, or using the products under the conditions or environment not specified in this catalog.
b) Nuclear controllers, incinerators, railways, aviation, vehicles, medical equipment, semiconductor manufacturing equipment, game machines, safety devices and equipment regulated by administrative agencies or individual maker.
c) Systems, machines and devices that can cause personal or property damage.
d) Equipment requiring high degree of reliability, e.g. gas, water and electricity supply systems, and 24-hour continuous operation systems.
e) Automobile (Including two-wheeled vehicles) mounted equipment
f) Other purposes equivalent to the above-said paragraph a) through e) requiring high degree of safety.

③ If the product is used for purposes that might induce serious personal or property damage, be sure that you inform risks covering the entire system in advance or verify whether the product is designed to ensure required safety or whether the product is properly connected and installed to suit the intended overall purposes
④ The purposes of the products shown in this catalog are only for reference purposes. Apply such purposes only after you check the functions and the safety of the equipment and devices.
⑤ To prevent unexpected damage to you or to third parties resulting from improper use of this product, be sure to use the product after you thoroughly read and understand items related to prohibitions and caution during use.

4. Changing specifications

The products and specifications entered in this catalog are subject to change as needed for improvement or for other reasons. Discuss with the sales manager of this company and verify actual specifications of the products.

5. Range of service

The product prices do not contain any service expenses, e.g. dispatch of technicians. If you need any services, discuss with the sales manager of this company.

6. Scope of application

Items described above are on the premise that the products are traded and used in the Republic of Korea. Discuss with the sales manager of this company regarding overseas transactions and uses.

GUIDELINES FOR SAFETY

안전을 위한 주의사항 Guidelines for Safety

- **"안전을 위한 주의사항" 은 제품을 안전하고 올바르게 사용하여 사고나 위험을 미리 막기 위한 것이므로 반드시 지켜 주십시오.**
- **주의사항은 "경고"와 "주의"의 두 가지로 구분되어 있으며 "경고" 와 "주의"의 의미는 다음과 같습니다.**

⚠ **경고** 지시사항을 위반하였을 때 심각한 상해나 사망이 발생 할 가능성이 있는 경우입니다.

⚠ **주의** 지시사항을 위반하였을 때 경미한 상해나 제품손상이 발생할 가능성이 있는 경우 입니다.

- 제품과 사용설명서에 표시된 ⚠ 그림기호의 의미는 특정 조건 하에서 위험이 발생 할 우려가 있으므로 주의하라는 기호입니다.

⚠ 경 고

1. **인명이나 재산상에 영향이 큰 기기 (예: 원자력제어, 의료기기, 차량, 철도, 항공, 연소장치, 오락기기 등 또는 안전장치)에 사용할 경우 반드시 2중으로 안전장치를 부착한 후 사용하여 주십시오.**
   - 화재, 인명사고, 재산상의 손실이 발생할 수 있습니다.
2. **반드시 패널에 취부 하여 사용하시고 FG 또는⏚단자는 접지하여 주십시오.**
   - 감전의 우려가 있습니다.
3. **전원이 인가된 상태에서 결선 및 점검, 보수를 하지 마십시오.**
   - 감전의 우려가 있습니다.
4. **자사 수리기술자 이외에는 제품을 개조하지 마십시오.**
   - 감전이나 화재의 우려가 있습니다.
5. **입력 전원사양을 반드시 확인하시고 전원 연결 시 반드시 단자번호를 확인하시고 연결하십시오.**
   - 화재의 우려가 있습니다.
6. **전원을 차단한 직후에 부하측 단자를 만지지 마십시오.**
   - 감전의 우려가 있습니다.

⚠ 주 의

1. **실외에서 사용하지 마십시오.**
   - 제품의 수명이 짧아지는 원인이 되며 감전의 우려가 있습니다.
2. **전원 및 부하배선 연결 시에는 부하전류에 따른 전선의 굵기에 유의하여 주십시오.**
   - 전류에 비하여 전선의 굵기가 가늘면 화재의 위험이 있습니다.
3. **단자대의 나사는 규정토크로 조여 주십시오.**
   규정토크(TORQUE) M3.5: 0.6~1.2N(6~12kgf.cm), M4 : 1.3~1.5 N(10~14Kgf.cm), M5: 2.1~3.0N(21~30kgf.cm), M8:10.6~12.5N(108~127kgf.cm), M12: 35.7~42N(364~428kgf.cm) M14: 57.8~68N(590~693kgf.cm)
   - 나사가 풀리면 접촉불량으로 화재의 우려가 있습니다.
4. **반드시 정격과 성능 범위내에서 사용하여 주십시오.**
   - 제품의 수명이 단축되고 고장 발생의 원인이 됩니다.
5. **청소시 물, 유기용제 등의 사용을 금합니다.**
   - 감전 및 화재와 제품변형의 우려가 있습니다.
6. **가연성가스, 폭발성가스, 습기, 직사광선, 복사열, 진동, 충격이 있는 장소에서의 설치 및 운전을 금합니다.**
   - 제품수명단축 및 고장, 화재, 폭발의 위험이 있습니다.
7. **제품의 내부로 먼지나 배선찌꺼기 등의 유해한 도체가 유입되지 않도록 하여 주십시오.**
   - 고장 및 화재의 우려가 있습니다.
8. **제품 사용시 환기되지 않는 밀폐된 곳에서 사용하지 마십시오.**
9. **동작 중 방열판류에는 고열이 발생하므로 절대 만지지 마십시오.**
   - 감전 및 화상의 우려가 있습니다.
10. **제품폐기 시에는 산업폐기물로서 처리하여 주십시오.**

- Guidelines for safety is to use product safe and properly and prevent accidents or dangers. Never forget to keep it.
- Guidelines can be classified into two, warning and caution, and their meanings are as follows.

⚠ **Warning** When there is the possibility that serious injury or death can occur when violating directions.

⚠ **Caution** When there is the possibility that slight injury or the damage of products can occur when violating directions.

- The meaning of ⚠ lexigram indicated on the products and instructions is to handle with care as any danger can occur under specific conditions.

⚠ Warning

1. When using in instruments that have great influence on lives or properties(for examples: nuclear energy control, medical equipment, vehicles, railroad, aviation, combustion apparatus, entertainment systems or safety device), use after being sure to attach duplex safety device.
   - There may be fire, loss of lives, or property damages.
2. Use after being sure to attach to panel, and ground FG or ⏚ terminal.
   -There may be the possibility of electric shock.
3. Don't connect, inspect and repair under the power-up.
   -There may be the possibility of electric shock.
4. Don't remodel products except by the company's engineers.
   -There may be the possibility of fire or electric shock.
5. Be sure to check input power source options, and connect after checking terminal number when connecting power sources.
   -There may be the possibility of fire.
6. Don't touch the terminal of load side immediately after power source is cut off.
   -There may be the possibility of electric shock.

⚠ Caution

1. Don't use outdoors (for outdoor, separate order)
   -It can be a cause of product's life becoming short, and there may be the possibility of electric shock.
2. When connecting power source and load wiring, pay attention to the thickness of cables according to load current.
   -There may be the danger of fire if the thickness of cables is small for the current.
3. Tighten the screw of port by the regulated torque.
   The regulated torque - M3.5 : 0.6~1.2N(6~12kgf.cm), M4 : 1.3~1.5 N(10~14Kgf.cm), M5 : 2.1~3.0N(21~30kgf.cm) M8 : 10.6~12.5N(108~127kgf.cm), M12 : 35.7~42N(364~428kgf.cm), M14 : 57.8~68N(590~693kgf.cm)
   -If the screw comes loose, there may be the possibility of fire because of bad contact.
4. Be sure to use within the range of rating and performance.
   -Product's life is shortened, and it may be a cause of troubles.
5. Don't use water or organic solvent when cleaning.
   -There may be the possibility of electric shock, fire and product deformation.
6. Don't install or operate in places with inflammable gas, explosive gas, direct ray of light, radiation heat, vibration and shock.
   -There may be the possibility of troubles and fire.
7. Make sure that harmful conductors such as dust or fragments of cables may not be flowed into the inside of product.
   -There may be the possibility of trouble or fire.
8. Don't use this product where closed and not ventilated place
   - It may cause a fire and the damage to product.
9. Never touch during operation as there is superheat on the radiator board.
10. Dispose as industrial waste when discarding products.

Surge에 대하여 Explanation

CE RoHS

1. 개요

서지란 무엇인가?

- 매우 짧은 시간(수 ms) 동안 선을 따라서 전달되며 급속히 증가하고 서서히 감소하는 특성을 지닌 전기적 전류, 전압 또는 전력의 과도파형을 일컫는다.

Surge의 종류

① 자연에 의한 surge
- 직격뢰 : 낙뢰가 구조물, 장비, 전력선 등에 직접 뇌격하는 surge
- 간접뢰 : 전원선, 통신선을 통하여 전달되는 surge
- 유도뢰 : 매설된 전원선, 통신선을 통하여 유도되는 surge

② 개폐 및 기동에 의한 surge
- 개폐 surge : 유동성 부하, 전기기기의 개폐로 발생
- 기동 surge : Inverter 등 power swtching 시 발생

③ 지락, 순간정전, 기타 고장에 의한 surge

Surge 보호의 필요성

① 전자 산업의 급속한 발전

② 낙뢰 서지로 인한 피해 시 경제적, 시간적 손실 극심

③ 내/외부 서지 발생 기기의 사용 증가

2. 보호대책

피뢰침

① 목적
- 전류를 피뢰침으로 사전에 방전시켜 건물이나 구조물에 대하여 직격뢰를 방지

② 문제점
- 기기보호의 측면에서 보면 피뢰침을 통해 훨씬 많은 surge가 유입되며, 피뢰침의 성능이 우수할수록 surge의 유입은 많아진다.

접지

① 목적
- 겉으로 드러난 금속구조물이 대지와 등전위를 유지하게 하여 전기 쇼크로 인한 사고를 방지
- 상과 대지 사이, 상과 중성점 사이의 전압이 상승하는 것을 방지한다.

② 문제점
- 전하가 주입된 지점의 대지전위는 멀리 떨어진 곳의 기준 전위에 비해 상승한다. 결국 대지에 형성된 전위 경도로 인하여 접지 사이에 폐 회로(loop)가 형성되어 접지에 연결된 장비에 손상을 입힌다.

SPD

① 목적
- 최초 서지가 발생한 곳에서 서지를 차단하여 타 시스템으로 서지의 피해가 전이되는 것을 차단

② 문제점
- 설치 위치, 서지 빈도, 기대 수명 등에 따라 올바른 위치에 SPD 용량을 선택하여 사용하여야 하며 초기 설계 비용이 증가한다.

1. Outline

About the surge

- A surge means a transient waveform of electric current,voltage or power that has a characteristic of being transmitted along a line for a very short time(several ms) and increasing suddenly and slowly decreasing.

Kind of surges

① A surge by nature
- Direct lightning : A surge in which a bolt of lightning directly strikes a structure, equipment, power cable, etc.
- Indirect lightning : A surge transmitted through a power cable or communication line
- Inductive lightning : A surge induced through an underground power cable or communication line

② A surge by opening/closing and starting
- Opening/closing surge : Caused by a inductive load or opening/closing of an electric device
- Starting surge : Caused by the power switching of an inverter, etc.

③ A surge due to grounding, instantaneous power outage or other troubles

Necessity of surge protection

① Rapid development of electronic industry

② Severe economic and temporal loss in case of damage due to a lightning surge

③ Increased use of an internal/external surge causing device

2. Protection measure

Lightning rod

① Purpose
- Protection of a direct lightning on a building or structure by discharging electric currents in advance with a lightning rod

② Problem
- In terms of device protection, far more surges flow in due to a lightning rod, and the more superior the lightning rod, the more the surge flows in.

Grounding

① Purpose
- Prevention of an accident due to an electric shock because the exposed metal structure maintains the same potential as the ground
- Prevention of a voltage rise between the phase and the ground and between the phase and the neutral point

② Problem
- The ground potential at the electrically charged point rises compared to the reference potential at a far-away place. Finally, a closed loop is created between the ground and the equipment due to a potential gradient formed on the ground to cause damage to the equipment connected to the ground.

SPD

① Purpose
-Interception of a transition of surge damage to another system by intercepting the surge at its first occurrence place

② Problem
- A proper capacity of SPD shall be selected and used at a proper location depending on its installation location, surge frequency, life expectancy, etc., and its initial design costs are increased.

SPD의 기술적 설명 About the surge

CE RoHS

3. SPD의 정의

① 과도 전압과 노이즈를 감쇄시키는 장치

② 국제적으로는 SPD(Surge Protective Device)라 부르고, UL에서는 TVSS(Transient Voltage Surge Suppressor)라고 부른다.

4. 동작 원리

- 전력시스템의 외부에서 유입되는 직, 간접의 뇌서지 및 내부에서 발생되는 서지의 순간 과도 전압을 저감시키고 그 에너지를 대지로 흘려 보낸다. 또한 대지로 부터 유입되는 서지를 억제함으로써 기기를 보호한다.

3. Definition of SPD

① A device to decrease transient voltage and noise

② Called a SPD(Surge Protective Device) internationally, and called a TVSS(TransientVoltageSurgeSuppressor) by UL

4. Operation principle

- This reduces the instantaneous transient voltage of a direct/indirect surge coming from the outside of a power system and a surge occurring from its inside, and discharges its energy to the ground. In addition, this protects the equipment by suppressing the surge coming from the ground.

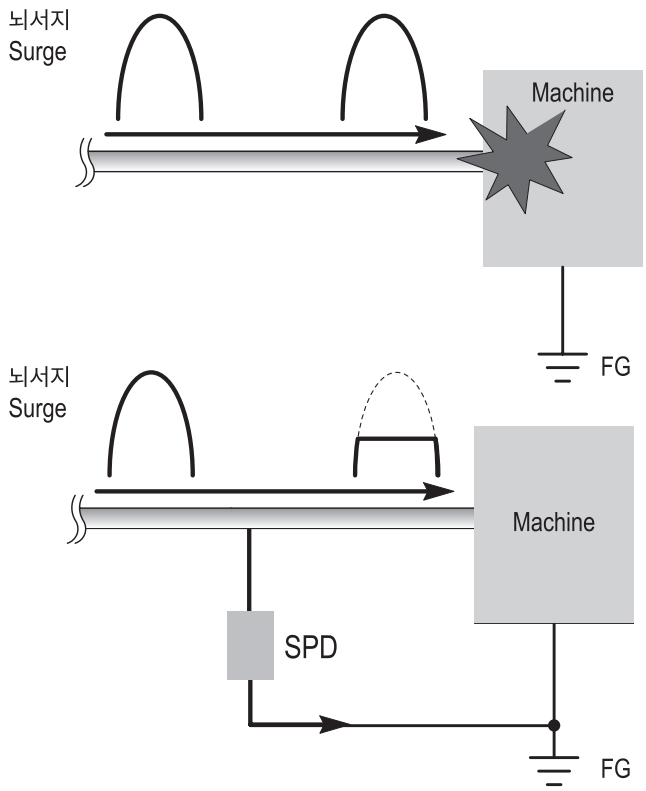

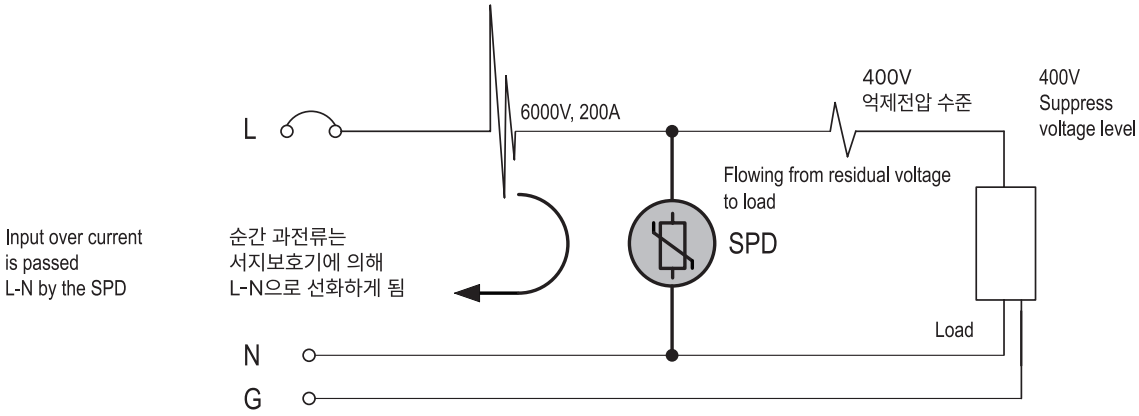

5. SPD의 종류

보호방법에 의한 분류

① 방전형 SPD

- 동작원리 : 방전개시전압 이하에서는 개방 상태에 있다가 방전개시전압을 초과하는 surge가 유입되면 순간적으로 도통상태가 되어 전류가 SPD로 흘러 전압이 강하되며, surge가 제거되면 다시 개방 상태로 돌아간다.
- 소자의 구성 : GDT(Gas Discharge Tube)

소 자	특 성
GDT (Gas Discharge Tube)	- 느린 응답특성 - 대전류 방류 가능 - 동작 개시전압 높음(>100V) - 매우 적은 누설 캐패시턴스(<2pF) - 속류 가능성 있음

- 특성

•방전개시전압이 사용전압에 비해 훨씬 높다.
•동작 속도가 느려 근래에는 거의 사용하지 않는다.
•정밀장비 보호용에는 이 방식의 제품을 사용하지 않는 것이 좋다.

② 억제형 SPD

- 동작원리 : 동작전압 이하일 때는 매우 높은 impedance를 갖고 있다가, 동작전압을 초과하는 surge에 대해서는 매우 낮은 impedance를 갖는다.
선로 impedance와 SPD impedance의 상관관계에 의해 surge가 억제된다.
- 소자의 구성 : MOV(Metal Oxide Varistor)

소 자	특 성
MOV (Metal Oxide Varistor)	- 빠른 응답특성 - 에너지 내량 큼 - 대 전류 방류가능 - 누설 캐패시턴스 (1~10nF)

- 특성

•반응 속도가 빠르다.
•surge 흡수 능력이 우수해 정밀장비 보호용으로 적합하다.
•50kA 이상의 SPD에는 거의 이 방식을 사용하고 있다.

③ 조합형 SPD

- 방전형과 억제형을 조합하여 사용하는 방식
- 통신용으로 극히 일부 제품에 사용된다.

설치 방법에 의한 분류

① 직렬형

- 소용량의 안정된 전원을 요하는 기기에 사용
- 설치 및 유지보수가 어렵다.

② 병렬형

- 수,배전반 등의 중,대용량 전원에 사용
- 설치 및 유지보수가 쉽다.
- 선의 길이가 짧을수록 좋다. (40~60cm이내)

5. Kind of SPD

Classification according to protection methods

① Discharge type SPD

- Operation principle : This is opened when below the discharge starting voltage, is instantaneously energized when a surge exceeding the discharge starting voltage comes in, so that electric currents flow into the SPD and voltage drops, and returns to an opened state again if a surge is removed.
- Element configuration : Gas Discharge Tube

Element	Characteristics
GDT (Gas Discharge Tube)	- Slow response characteristics - High current dischargeable - High operation starting voltage(>100V) - Very low leakage capacitance(<2pF) - Follow current possible

- Characteristics

· The discharge starting voltage is far higher than the working voltage.
· This is rarely used recently because its operation speed is low.
· It is better not to use this type of product for protection of precision equipment.

② Suppression type SPD

- Operation principle : This has very high impedance when below the working voltage, but has very low impedance for a surge exceeding the working voltage. The surge is suppressed by a correlation between the line impedance and the SPD impedance.
- Element configuration : MOV (Metal Oxide Varistor)

Element	Characteristics
MOV (Metal Oxide Varistor)	- Fast response characteristics - Large energy capacity - High current dischargeable - Leakage capacitance (1~10nF)

- Characteristics

· The reaction speed is fast.
· The surge absorption ability is superior to be suitable for protection of precision equipment.
· The 50kA or higher SPD almost uses this method.

③ Combined SPD

- A method of using the combination of a discharge type and a suppression type
- Used in a very small part of products for communication

Classification according to installation methods

① Series type

- Used in a device requiring a small capacity of stable power
- Difficult to install and maintain

② Parallel type

- Used in a medium and large capacity of power such as incoming/distribution panel, etc.
- Easy to install and maintain
- The shorter line length is better(within 40~60cm)

6. 용어정리 < IEC 61643-1에 근거 >

(1)공칭전압(Nominal Voltage) - UN : SPD를 적용할 계통의 정격전압

① 전력계통용 : 110V, 220V, 380V 등
② 통신계통용 : 6V, 12V, 24V 등

(2)최고연속운전전압(Max. Continuous Operating Voltage) - Uc

- SPD가 연속적으로 운전될 수 있는 전압의 최고치.
  일반적으로 공칭전압의 120%이다. SPD가 이 수치를 초과하는 전압에 노출되어 과열되면 수 초 안에 파손된다.

(3)최대방전전류(Max. Discharge Current) - Imax

- 8/20㎲ 파형의 전류로서 SPD가 1회에 한해 견딜 수 있는 전류

(4)공칭방전전류(Nominal Discharge Current) - In

- 8/20㎲ 파형의 전류로 SPD가 15회를 견딜 수 있는 전류, 일반적으로 최대방전 전류의 절반

(5)전압보호수준(Voltage Protection Level) - Up

- SPD에 공칭방전 전류(In)를 흘릴 때 SPD의 단자 양단에 나타나는 전압

(6)공칭전류(Nominal Current) - IN : SPD가 흘릴 수 있는 부하 전류, 직렬형 SPD에 적용한다.

① 전력계통용 : 8A, 10A, 20A 등
② 통신계통용 : 20mA, 100mA, 500mA 등

(7)연속운전전류(Continuos Operating Current) - Ic

- 최고 연속 운전 전압에서 병렬형 SPD에 흐르는 전류.
  이보다 많은 전류가 연속적으로 흐르게 되면 SPD가 과열되면서 짧은 시간 안에 고장나게 된다.

(8)임펄스전류(Impulse Current) - Iimp

- 전류의 피크값 Ipeak, 전하 Q, 비에너지 W/R로 정의된다.
- SPD의 시험 1등급을 분류하기 위하여 사용된다.

(9)반응시간(Response Time)

- SPD에 최고 연속 운전 전압보다 높은 서지전압이 인가될 때 스위칭이 시작될 때 까지의 시간. 서지전압의 파형이 ㎲로 표시되는데 비해 반응시간은 ns 또는 ps로 표시된다.

(10)보호 모드(Protection Mode)

- SPD의 서지억제 소자는 선과 선(line to line), 선과 접지(line to earth), 선과 중선선(line to neutral) 또는 중선선과 접지(neutral to earth) 사이에 접속되어 두점 사이에 걸리는 서지를 억제하게 되는데, 이러한 접속경로를 보호모드라 한다.

6. Summary of terminology <Based on IEC 61643-1>

(1) Nominal Voltage - UN : A rated voltage in a system to apply SPD

① For a power system : 110V, 220V, 380V, etc.
② For a communication system : 6V, 12V, 24V, etc.

(2) Max. Continuous Operating Voltage - Uc

- A peak value of voltage in which SPD can be continuously operated.
  This is generally 120% of the nominal voltage. If exposed to a voltage exceeding this value and heated,the SPD is damaged within several seconds.

(3) Max. Discharge Current - Imax

- An electric current of 8/20us waveform that SPD can endure only once.

(4) Nominal Discharge Current - In

- An electric current of 8/20us waveform that SPD can endure 15 times, which is half the maximum charge current in general.

(5) Voltage Protection Level - Up

- A voltage appearing in both terminals of SPD when a nominal discharge current(In) flows in SPD.

(6) Nominal Current - IN : A load current that SPD can discharge, which is used in a series type SPD.

① For a power system : 8A, 10A, 20A, etc.
② For a communication system : 20mA, 100mA, 500mA, etc.

(7) Continuous Operating Current - Ic

- An electric current flowing in a parallel type SPD in the Max. continuous operating voltage, continuously flowing more electric currents than which can overheat the SPD to result in a trouble within a short time.

(8) Impulse Current - Iimp

- Defined as a peak current value Ipeak, electric charge Q and specific energy W/R.
- Used to classify the SPD test class 1

(9) Response Time

- A time until switching starts when a higher surge voltage than the max. continuous operating voltage is applied to SPD, which is displayed as ns or ps, whereas the surge voltage waveform is displayed as ㎲.

(10) Protection Mode

- The surge suppression element of a SPD sup presses the surge applied between two points by being connected between line to line, line to earth, line to neutral or neutral to earth, so this access route is called a protection mode.

(11)삽입손실(Insertion loss)

- 직렬형 SPD 삽입지점에서 삽입 이전과 이후의 선로 양단에 나타나는 전압의 비율. 일반적으로 일정 주파수에서 통신계통에 연결된 SPD의 손실을 표시하는데 사용되며 결과는 dB로 표시된다.

(11) Insertion loss

- A ratio of voltage appearing in both ends of a line before and after insertion at a series type SPD insertion point Generally, it is used to display the loss of SPD connected to a communication system at a certain frequency, whose results are displayed as dB.

7. SPD의 형식

SPD 형식은 type I~III까지 분류한다. 각 type에 대한 SPD는 다음 항목의 시험에 합격하여야 한다.

7. Type of SPD

The types of SPD are classified into TYPE **I~III.** Each type of SPD shall pass the following tests.

SPD type	SPD test	Class test item (IEC61312-1)
Type I	Class I	전압(1.2/50㎲), 전류(Iimp, 10/350㎲)
Type II	Class II	전압(1.2/50㎲), 전류(In, 8/20㎲)
Type III	Class III	전압(1.2/50㎲), 전류(In, 8/20㎲)

8. SPD 설치

SPD를 설치할 때는 다음 사항을 고려한다.
누전차단기 부하 측에 SPD 설치 시 누전차단기는 시간지연장치 유무에 상관없이 최소 3kA, 8/20㎲의 서지 전류에 대한 내성을 가져야 한다.

8. SPD installation

When installing a SPD, consider the followings:
When installing a SPD at the load side of an earth leakage circuit breaker, the earth leakage circuit breaker shall have endurance against a surge current of at least 3kA and 8/20㎲ regardless of whether there is a time delay device.

Classfication	Over voltage category IV	Over voltage category III	Over voltage category II	Over voltage category I
SPD grade	10/350(㎲)	8/20(㎲)	8/20(㎲)	1.2/50(㎲), 8/20(㎲)
Test grade	Class I & II	Class II	Class II & III	Class III
Over voltage suppress standard	6kV	4kV	2.5kV	1.5kV
SPD installaion place	Distributing board	Distributing board	Assist distributing board	Precise equipment

SPD의 기술적 설명 About the surge

CE RoHS

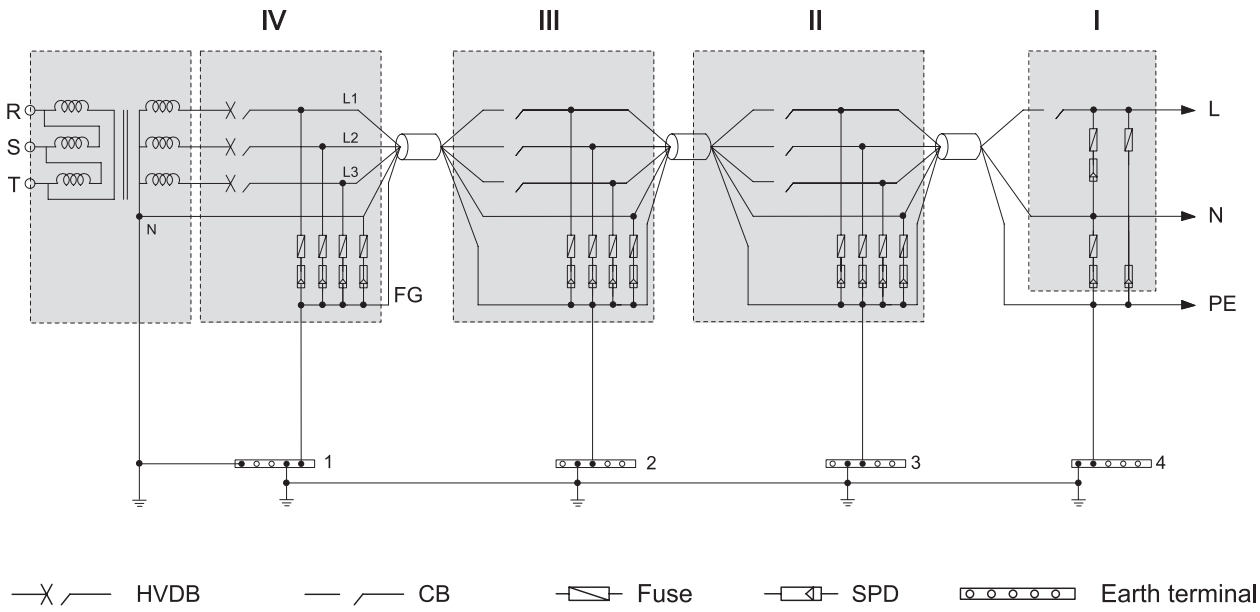

9. 요구되는 특성

- 정상 상태 시 시스템에 영향이 없을 것
- 동작 및 고장 시 안전할 것(열폭주방지 회로)
- 보호단자의 전압차단이 일정할 것
- 고속응답 동작할 것
- 유지/보수가 간편할 것
- 누설전류가 적을 것
- 연속 차단능력이 있을 것

9. Required characteristics

- There shall be no effect on the system in a normal state.
- It shall be stable when operating or in a trouble. (Thermal runway prevention circuit)
- The voltage interception for a protection terminal shall be constant.
- Shall respond at a high speed.
- Shall be convenient to maintain and repair.
- There shall be few leakage currents.
- Shall have a continuous breaking ability.

10. 용량 선정 기준 예

<table>
<tr><th>건축물의
보호등급</th><th>수배전반
(ACB 2차측)</th><th>주 분전반</th><th>방재실, MDF실,
전산실, 경비실 등
주요구간 분전반</th><th>승강기, MCC반 등
주요 단독부하</th><th>주차, 소방,
출입통제, 무선기기 등
단독부</th><th>신호/데이터
선로</th></tr>
<tr><td>4등급</td><td colspan="4">40kA/mode</td><td>–</td><td>–</td></tr>
<tr><td>3등급</td><td>80kA/mode</td><td colspan="3">40kA/mode</td><td rowspan="3">10~20kA/mode</td><td rowspan="3">10kA/mode</td></tr>
<tr><td>2등급</td><td>120kA/mode</td><td>80kA/mode</td><td colspan="2">40kA/mode</td></tr>
<tr><td>1등급</td><td>160kA/mode이상</td><td colspan="3">부하전류 800A 초과 : 160kA/mode 이상
부하전류 800A 이하 : 120kA/mode 이상
부하전류 400A 이하 : 80kA/mode 이상
부하전류 50A 초과 : 40kA/mode 이상</td></tr>
</table>

10. Capacity selection criterion example

<table>
<tr><th>Building protection class</th><th>Incoming/distribution panel (ACB secondary side)</th><th>Main distribution board</th><th>Major section distribution board in the disaster prevention room, MDF room, computer room, guard room, etc.</th><th>Major single load in the elevator, MCC board, etc.</th><th>Single load/household distribution board in the parking, firefighting, entrance control, wireless device, etc.</th><th>Signal/data line</th></tr>
<tr><td>Class 4</td><td colspan="4">40kA/mode</td><td>–</td><td>–</td></tr>
<tr><td>Class 3</td><td>80kA/mode</td><td colspan="3">40kA/mode</td><td rowspan="3">10～20 kA/mode</td><td rowspan="3">10kA/mode</td></tr>
<tr><td>Class 2</td><td>120kA/mode</td><td>80kA/mode</td><td colspan="2">40kA/mode</td></tr>
<tr><td>Class 1</td><td>160kA/mode or more</td><td colspan="3">Over 800A load current : 160kA/mode or more
800A or less load current : 120kA/mode or more
400A or less load current : 80kA/mode or more
Over 50A load current : 40kA/mode or more</td></tr>
</table>

● Connection

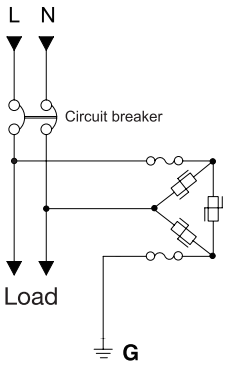

단상
(1phase)

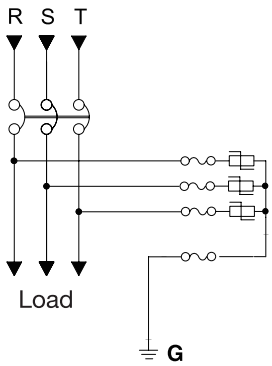

삼상접지형
(3phase earthed type)

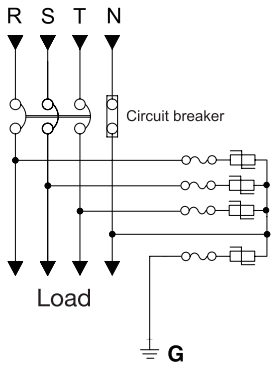

삼상N접지형
(3phase N-earthed type)

11. 외부 휴즈 및 차단기 사양 조견표 FUSE Capacity selection criterion example

NO	HRC (High rupturing capacity) FUSE (A)	In (kA) 공칭 전류	Imax (kA) 최대 방전 전류	차단기 용량 (MCCB)
1	32	7.5	15	30AF / 20AF 이상
2	40	15	30	
3	50	17.5	35	
4	63	20	40	
5	80	25	50	50AF 이상
6	100	40	80	
7	125	60	120	100AF / 50AF 이상
8	160	65	130	
9	200	100	200	
10	250	120	240	
11	315	130	260	
12	400	200	400	
13	500	240	480	
14	630	260	520	

- TVSS FUSE 사용시 : SUPPLY FUSE * 0.67(A) 사용(FUSE 소손은 SPD의 수명이 다함을 의미함.)
- SPD 보수용 차단기는 주차단기 용량보다 낮게 해야함.

12. SPD와 유사한 시스템의 차이 Difference between SPD and similar system

● 피뢰침
- 건축물의 파손과 인명 피해를 방지하기 위한 것
- Surge의 피해를 가중시키는 측면이 있다.

● 접지
- 구조물이나 인체를 전기적 충격으로부터 보호해주는 역할
- 전기의 기준 전압을 제공하지만 전자적인 system의 보호에는 취약함

● 노이즈필터
- Surge의 high speed, high energy를 속도와 용량에서 따르지 못한다.

● UPS
- UPS는 전원이 나가는 경우 충전되어 있던 전기로 일정 시간 동안 전원을 공급하여 주는 역할을 하는 기기로 서지의 방지와는 전혀 무관함

● AVR
- 상용 주파수(50/60Hz) 전원에서는 전원의 안정을 기하나, AVR 반응속도가 0.02~0.12초 이므로 ㎲급인 surge가 발생하였을 때 surge의 속도를 따라가지 못해 유입 시 surge가 기기에 피해를 입힌 다음 AVR이 작동하므로 오히려 정상 전압 시 전압을 하강시켜 전압의 변동폭을 확대하는 전원교란을 초래하는 경우

● 복권트랜스
- 1차 측으로 유입된 surge의 상당 부분은 2차 측으로 전이되므로 집적 반도체를 사용한 system에는 사용할 수 없다.

● 배선 및 누전차단기
- 누설전류가 흐를 경우에 작동한다.
- 과전류나 과전압의 유입 시에도 반응속도가 느려 surge를 방지하지 못한다.

● Lightning rod
- This aims to prevent damage to buildings and human life.
- This has an aspect of increasing damage of a surge.

● Grounding
- This serves as protecting a structure or human body from electric shocks.
- This provides an electric reference voltage, but is weak in protecting an electronic system.

● Noise filter
- This cannot follow the high speed and high energy of a surge in speed and capacity.

● UPS
- This is a device serving as supplying power for a certain time with the charged electricity in case of a power outage, having no relation with surge protection.

● AVR
- Thisseekspowerstabilizationincommercialfrequency(50/60Hz) power, but the AVR reaction speed is 0.02~0.12 sec, so it cannot follow the surge speed in case of a surge of ß¡ class to work after giving damage to the equipment, which rather causes a power turbulence expanding the variation width of voltage by reducing the voltage in a normal voltage.

● Isolating transformer
- A remarkable part of surge entering the primary side spreads to the secondary side, so it cannot be used for a system using an integrated semiconductor.

● Wiring and earth leakage circuit breaker
- This works when a leakage current flows.
- This cannot prevent a surge because its reaction speed is slow even when an over-current or over-voltage comes in.

● Din Rail Guide를 이용한 취부 방법 및 Bracket 규격 외형도

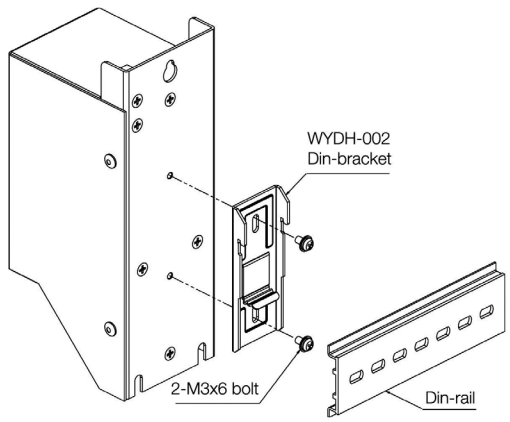

좌측 그림은 SPD Din Bracket을 이용한 취부방식 입니다.

1) 각 제품에 적용되는 Bracket을 참조하여 선정 바랍니다.
2) Bracket의 고정은 좌측 그림과 같이 SPD 측면에 Bracket에 볼트를 이용하여 고정한 다음 Din Rail에 취부하시기 바랍니다.
3) Bracket은 제품 구입 시 문의 바랍니다.

Model No	적용 모델	Dimension
WYDH-002	WYPB2020Txxx(C) WYPB2040Txxx(C) WYPB2020Lxxx(C) WYPB2040Lxxx(C) WYPB3020Txxx(C) WYPB3040Txxx(C) WYPB3020Lxxx(C) WYPB3040Lxxx(C) WYPB4020T511(C) WYPB4040T511(C) WYPB4020L511(C) WYPB4040L511(C)	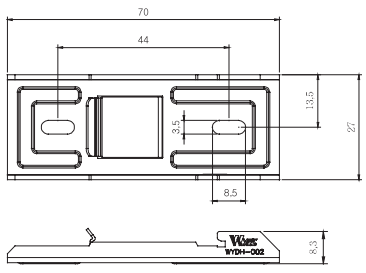

SPD 모델 구분표 Explanation

CE RoHS

WYP A 2 002 T 380 ☐

◎ 옵션(Option)
- C : Counter Type

◎ 정격전압(Rated voltage)
- 012 : 12VDC
- 024 : 24VDC
- 110 : 110VAC
- 220 : 220VAC
- 380 : 380VAC
- 440 : 440VAC

◎ 연결 단자 유형(Connection type)
- T : 터미널 타입(Terminal type)
- L : 리드 타입(Lead wire type)

◎ 정격 전류(Rated current)
- 002 : 2kA
- 003 : 3kA
- 010 : 10kA
- 015 : 15kA
- 020 : 20kA
- 025 : 25kA
- 040 : 40kA
- 060 : 60kA
- 070 : 70kA
- 080 : 80kA
- 100 : 100kA
- 120 : 120kA
- 160 : 160kA
- 200 : 200kA
- 240 : 240kA

◎ 일반형/고급형/카운터형/모듈형 (General/High quality/Counter type)
1 : 단상(1phase) / 1Pole(모듈형)
2 : 단상접지(1phase earthed type) / 2Pole(모듈형)
3 : 삼상접지(3phase earthed type) / 3Pole(모듈형)
4 : 삼상N접지(3phase N-earthed type) / 4Pole(모듈형)

◎ 품질 유형(Qualtiy type)
- A : 일반형(General type)
- B : 고급형(High quality type)
- C : 모듈형(Module type)
- D : 고급형-가로형(Horizontal type)

* Counter Type : 옵션으로 별도 분리구분

◎ Woonyoung SPD series [Surge Protective Device : 낙뢰보호장치]

단상, 삼상 모듈형 220, 380V Module type 10/20/40kA series

RoHS

Specification

ITEM \ MODEL		WYPC2010T220	WYPC2020T220	WYPC2040T220
Pole		1, 2, 3, 4 Pole		
Nominal voltage (Un)		220VAC		
Max. continuous operating voltage (Uc)		275VAC		
Voltage protection level (Up)		≤ 0.8	≤ 1.0	≤ 1.2
Rated frequency (Fo)		50/60Hz		
Max. discharge current (Imax)		10kA	20kA	40kA
Nominal discharge current (In)		5kA	10kA	20kA
Max. impulse current (Iimp)		–		
Protection level		Class II, III		
Protection mode		L, N–G		
Operating temperature range		−40~90°C		
Operating Humidity		35~85%RH		
Storage temperature range		−40~125°C		
Attachment method		Din–rail type		
Wire size for connections		Phase, neutral : >6mm² / Earth wire : >6mm²		
Response time		< 25 nano second		
Indicator	Green	Normal		
	Red	Abnormal		
Weight (kg)	1phase	0.2		
	3phase	0.5		

* 세부 Model은 모델구분표 참조

Dimension

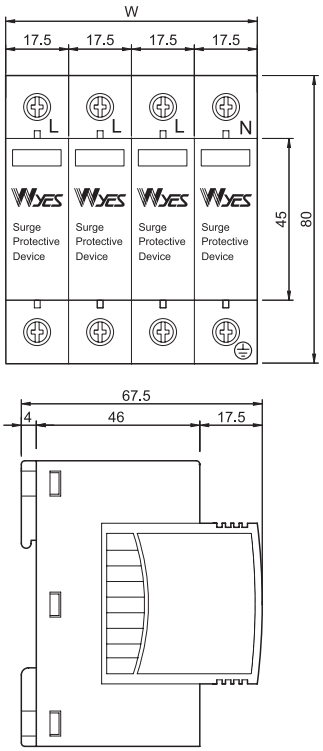

W : 1P - 17.5mm
2P - 35mm
3P - 52.5mm
4P - 70mm

Circuit diagram

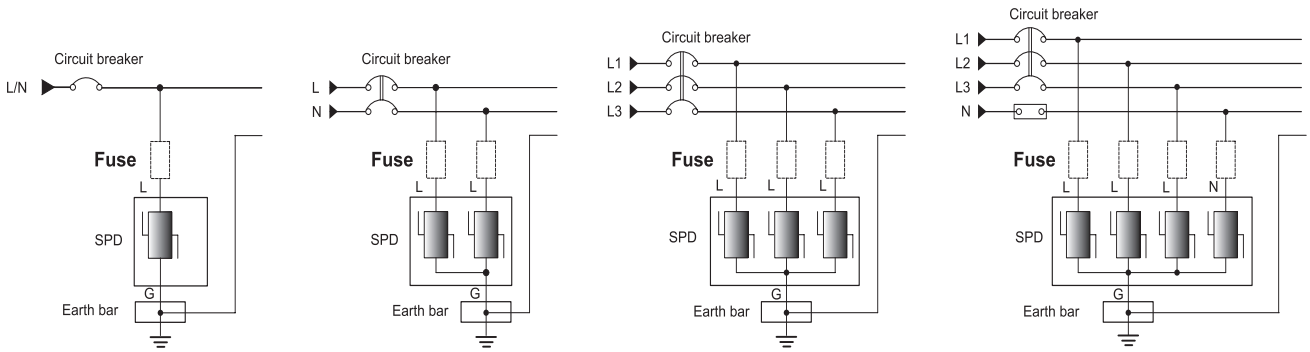

단상(1P2W)
(1phase type)

단상접지(1P2W)
(1phase earthed type)

삼상접지(3P3W)
(3phase earthed type)

삼상N접지(3P4W)
(3phase N-earthed type)

단상, 삼상 모듈형 220, 380V Module type 10/20/40kA series

Specification

ITEM \ MODEL		WYPC3010T220	WYPC3020T220	WYPC3040T220
Pole		1, 2, 3, 4 Pole		
Nominal voltage (Un)		220VAC		
Max. continuous operating voltage (Uc)		275VAC		
Voltage protection level (Up)		≤ 0.8	≤ 1.0	≤ 1.2
Rated frequency (Fo)		50 / 60Hz		
Max. discharge current (Imax)		10kA	20kA	40kA
Nominal discharge current (In)		5kA	10kA	20kA
Max. impulse current (Iimp)		–		
Protection level		Class II, III		
Protection mode		L, N–G		
Operating temperature range		–40 ~ 90°C		
Operating Humidity		35 ~ 85%RH		
Storage temperature range		–40 ~ 125°C		
Attachment method		Din–rail type		
Wire size for connections		Phase, neutral : >6mm² / Earth wire : >6mm²		
Response time		< 25 nano second		
Indicator	Green	Normal		
	Red	Abnormal		
Weight (kg)	1phase	0.2		
	3phase	0.5		

* 세부 Model은 모델구분표 참조

Dimension

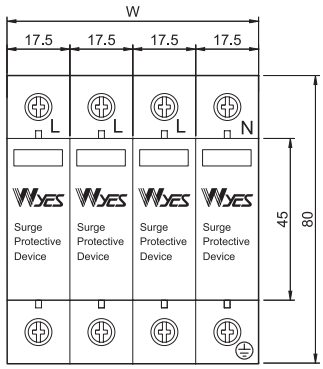

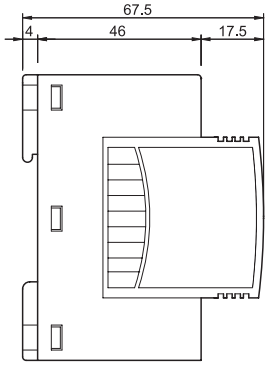

W : 1P - 17.5mm
2P - 35mm
3P - 52.5mm
4P - 70mm

Circuit diagram

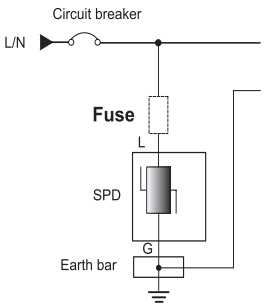

단상(1P2W)
(1phase type)

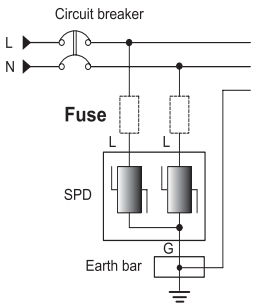

단상접지(1P2W)
(1phase earthed type)

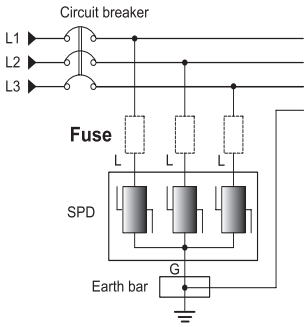

삼상접지(3P3W)
(3phase earthed type)

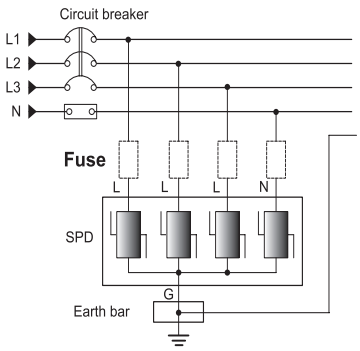

삼상N접지(3P4W)
(3phase N-earthed type)

단상, 삼상 모듈형 220, 380V Module type 10/20/40kA series

Specification

ITEM \ MODEL		WYPC3010T380	WYPC3020T380	WYPC3040T380
Pole		1, 2, 3, 4 Pole		
Nominal voltage (Un)		380VAC		
Max. continuous operating voltage (Uc)		385VAC		
Voltage protection level (Up)		≤ 1.2	≤ 1.5	≤ 1.8
Rated frequency (Fo)		50 / 60Hz		
Max. discharge current (Imax)		10kA	20kA	40kA
Nominal discharge current (In)		5kA	10kA	20kA
Max. impulse current (Iimp)		–		
Protection level		Class II, III		
Protection mode		L, N−G		
Operating temperature range		−40 ~ 90°C		
Operating Humidity		35 ~ 85%RH		
Storage temperature range		−40 ~ 125°C		
Attachment method		Din−rail type		
Wire size for connections		Phase, neutral : >6mm² / Earth wire : >6mm²		
Response time		< 25 nano second		
Indicator	Green	Normal		
	Red	Abnormal		
Weight (kg)	1phase	0.2		
	3phase	0.5		

* 세부 Model은 모델구분표 참조

Dimension

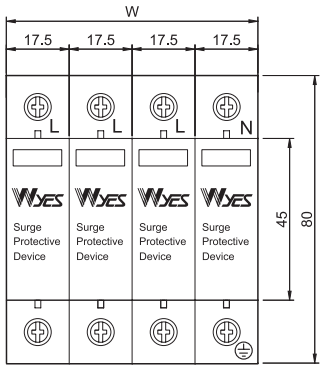

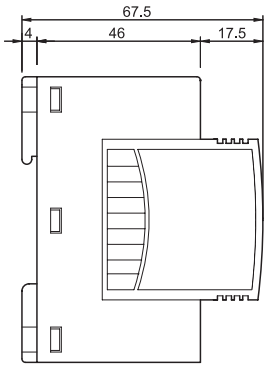

W : 1P - 17.5mm
2P - 35mm
3P - 52.5mm
4P - 70mm

Circuit diagram

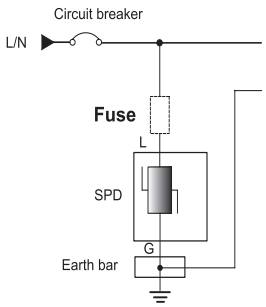

단상(1P2W)
(1phase type)

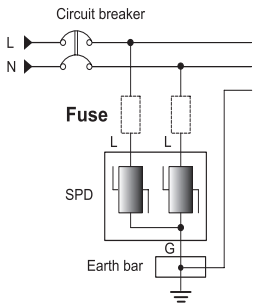

단상접지(1P2W)
(1phase earthed type)

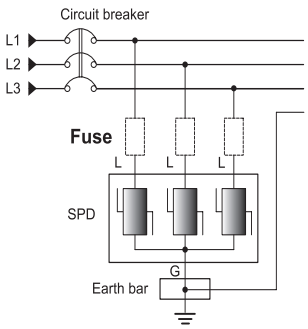

삼상접지(3P3W)
(3phase earthed type)

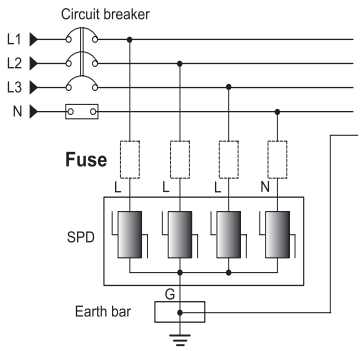

삼상N접지(3P4W)
(3phase N-earthed type)

단상, 삼상 모듈형 220, 380V Module type 10/20/40kA series

Specification

ITEM \ MODEL		WYPC4010T380	WYPC4020T380	WYPC4040T380
Pole		1, 2, 3, 4 Pole		
Nominal voltage (Un)		380VAC		
Max. continuous operating voltage (Uc)		385VAC		
Voltage protection level (Up)		≤ 1.2	≤ 1.5	≤ 1.8
Rated frequency (Fo)		50 / 60Hz		
Max. discharge current (Imax)		10kA	20kA	40kA
Nominal discharge current (In)		5kA	10kA	20kA
Max. impulse current (Iimp)		–		
Protection level		Class II, III		
Protection mode		L, N-G		
Operating temperature range		−40 ~ 90°C		
Operating Humidity		35 ~ 85%RH		
Storage temperature range		−40 ~ 125°C		
Attachment method		Din−rail type		
Wire size for connections		Phase, neutral : >6mm² / Earth wire : >6mm²		
Response time		< 25 nano second		
Indicator	Green	Normal		
	Red	Abnormal		
Weight (kg)	1phase	0.2		
	3phase	0.5		

* 세부 Model은 모델구분표 참조

Dimension

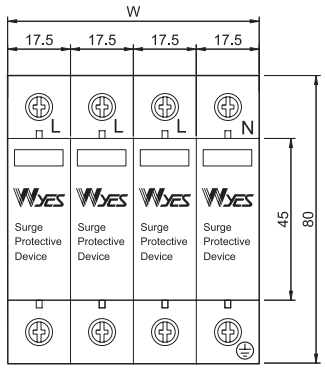

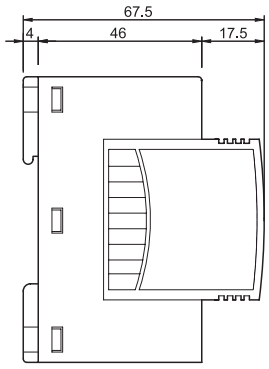

W : 1P - 17.5mm
2P - 35mm
3P - 52.5mm
4P - 70mm

Circuit diagram

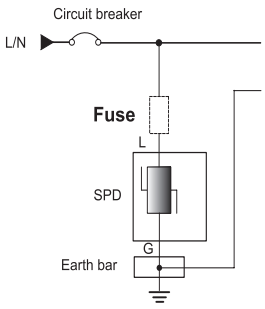

단상(1P2W)
(1phase type)

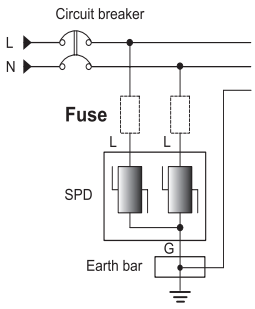

단상접지(1P2W)
(1phase earthed type)

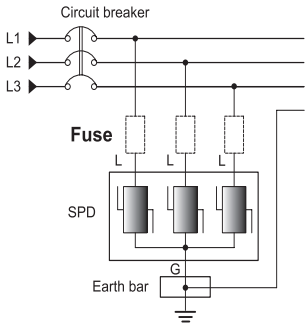

삼상접지(3P3W)
(3phase earthed type)

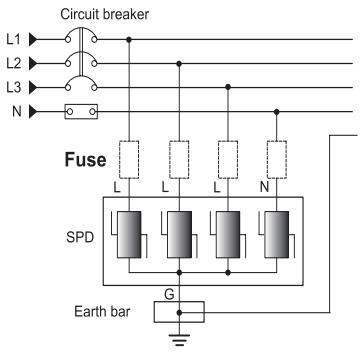

삼상N접지(3P4W)
(3phase N-earthed type)

단상, 삼상 모듈형 220, 380V Module type 60/80/100kA series

RoHS

Specification

ITEM \ MODEL		WYPC3060T220	WYPC3080T220	WYPC3100T220
Pole		1, 2, 3, 4 Pole		
Nominal voltage (Un)		220VAC		
Max. continuous operating voltage (Uc)		275VAC		
Voltage protection level (Up)		≤ 1.5	≤ 1.8	≤ 2.0
Rated frequency (Fo)		50 / 60Hz		
Max. discharge current (Imax)		60kA	80kA	100kA
Nominal discharge current (In)		30kA	40kA	60kA
Max. impulse current (Iimp)		–		
Protection level		Class II, III		
Protection mode		L, N–G		
Operating temperature range		–40 ~ 90°C		
Operating Humidity		35 ~ 85%RH		
Storage temperature range		–40 ~ 125°C		
Attachment method		Din–rail type		
Wire size for connections		Phase, neutral : >10mm² / Earth wire : >16mm²		
Response time		< 25 nano second		
Indicator	Green	Normal		
	Red	Abnormal		
Weight (kg)	1phase	0.2		
	3phase	0.5		

* 세부 Model은 모델구분표 참조

Dimension

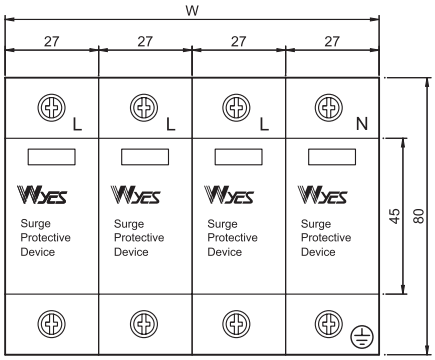

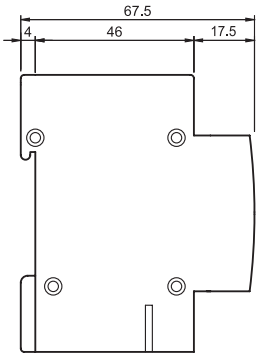

W : 1P - 27mm
2P - 54mm
3P - 81mm
4P - 108mm

Circuit diagram

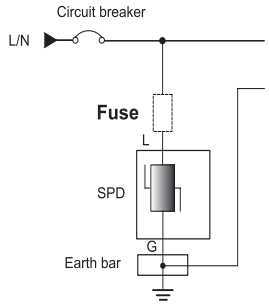

단상(1P2W)
(1phase type)

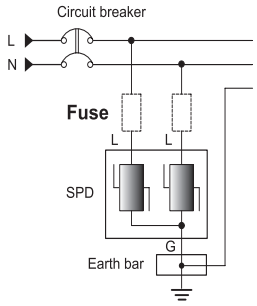

단상접지(1P2W)
(1phase earthed type)

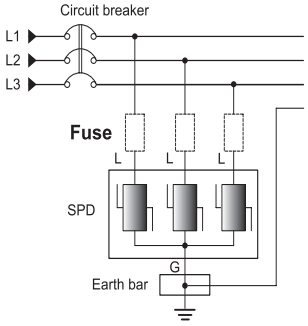

삼상접지(3P3W)
(3phase earthed type)

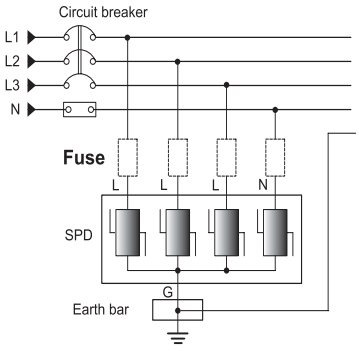

삼상N접지(3P4W)
(3phase N-earthed type)

단상, 삼상 모듈형 220, 380V Module type 60/80/100kA series

RoHS

Specification

ITEM \ MODEL		WYPC3060T380	WYPC3080T380	WYPC3100T380
Pole		1, 2, 3, 4 Pole		
Nominal voltage (Un)		380VAC		
Max. continuous operating voltage (Uc)		385VAC		
Voltage protection level (Up)		≤ 2.0	≤ 2.2	≤ 2.5
Rated frequency (Fo)		50/60Hz		
Max. discharge current (Imax)		60kA	80kA	100kA
Nominal discharge current (In)		30kA	40kA	60kA
Max. impulse current (Iimp)		–		
Protection level		Class II, III		
Protection mode		L, N–G		
Operating temperature range		–40 ~ 90°C		
Operating Humidity		35 ~ 85%RH		
Storage temperature range		–40 ~ 125°C		
Attachment method		Din–rail type		
Wire size for connections		Phase, neutral : >10mm² / Earth wire : >16mm²		
Response time		< 25 nano second		
Indicator	Green	Normal		
	Red	Abnormal		
Weight (kg)	1phase	0.2		
	3phase	0.5		

* 세부 Model은 모델구분표 참조

Dimension

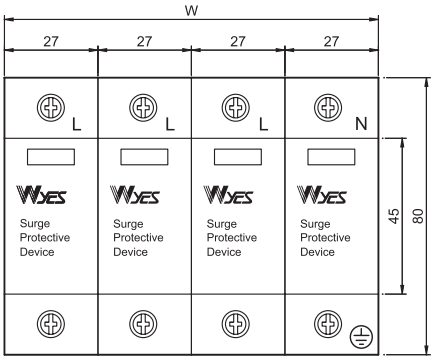

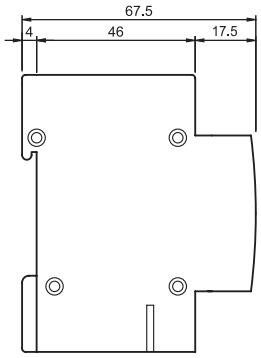

W : 1P - 27mm
2P - 54mm
3P - 81mm
4P - 108mm

Circuit diagram

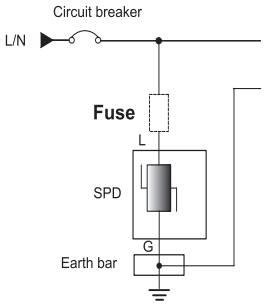

단상(1P2W)
(1phase type)

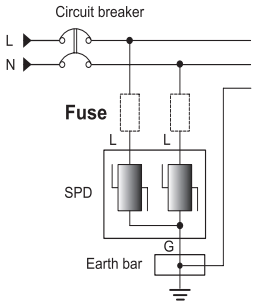

단상접지(1P2W)
(1phase earthed type)

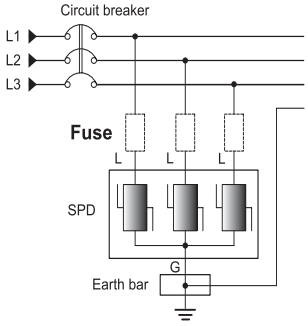

삼상접지(3P3W)
(3phase earthed type)

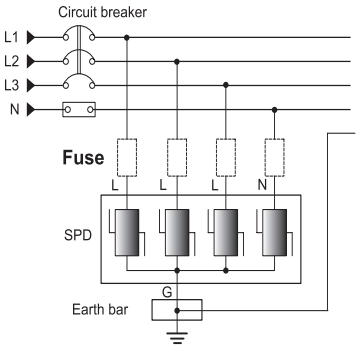

삼상N접지(3P4W)
(3phase N-earthed type)

단상, 삼상 모듈형 220, 380V Module type 60/80/100kA series

RoHS

Specification

ITEM \ MODEL		WYPC4060T380	WYPC4080T380	WYPC4100T380
Pole		1, 2, 3, 4 Pole		
Nominal voltage (Un)		380VAC		
Max. continuous operating voltage (Uc)		385VAC		
Voltage protection level (Up)		≤ 2.0	≤ 2.2	≤ 2.5
Rated frequency (Fo)		50 / 60Hz		
Max. discharge current (Imax)		60kA	80kA	100kA
Nominal discharge current (In)		30kA	40kA	60kA
Max. impulse current (Iimp)		–		
Protection level		Class II, III		
Protection mode		L, N–G		
Operating temperature range		–40 ~ 90°C		
Operating Humidity		35 ~ 85%RH		
Storage temperature range		–40 ~ 125°C		
Attachment method		Din–rail type		
Wire size for connections		Phase, neutral : >10mm² / Earth wire : >16mm²		
Response time		< 25 nano second		
Indicator	Green	Normal		
	Red	Abnormal		
Weight (kg)	1phase	0.2		
	3phase	0.5		

* 세부 Model은 모델구분표 참조

Dimension

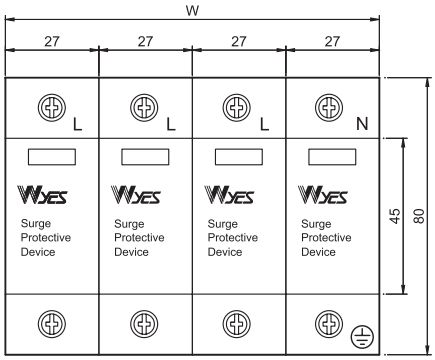

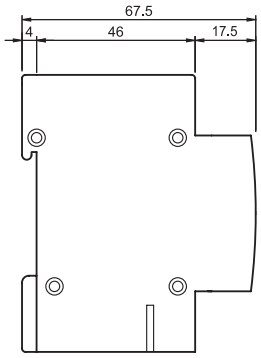

W : 1P - 27mm
2P - 54mm
3P - 81mm
4P - 108mm

Circuit diagram

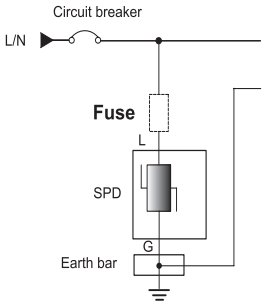

단상(1P2W)
(1phase type)

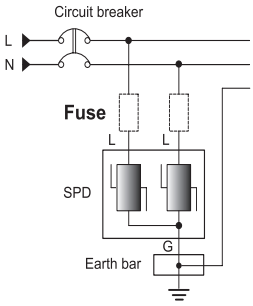

단상접지(1P2W)
(1phase earthed type)

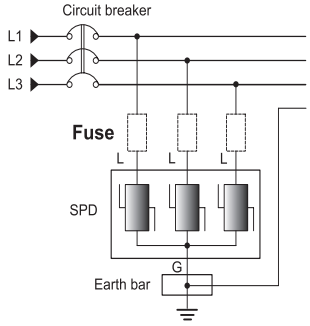

삼상접지(3P3W)
(3phase earthed type)

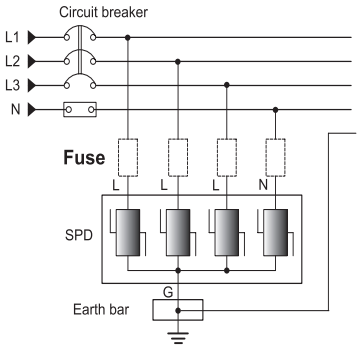

삼상N접지(3P4W)
(3phase N-earthed type)

단상, 삼상 모듈형 220, 380V Module type 120/160kA series

RoHS

Specification

ITEM \ MODEL		WYPC3120T220	WYPC3160T220
Pole		1, 2, 3, 4 Pole	
Nominal voltage (Un)		220VAC	
Max. continuous operating voltage (Uc)		275VAC	
Voltage protection level (Up)		≤ 2.0	
Rated frequency (Fo)		50 / 60Hz	
Max. discharge current (Imax)		120kA	160kA
Nominal discharge current (In)		60kA	80kA
Max. impulse current (Iimp)		12.5 / 15kA	
Protection level		Class II, III	
Protection mode		L, N−G	
Operating temperature range		−40 ~ 90°C	
Operating Humidity		35 ~ 85%RH	
Storage temperature range		−40 ~ 125°C	
Attachment method		Din−rail type	
Wire size for connections		Phase, neutral : >10mm² / Earth wire : >16mm²	
Response time		< 25 nano second	
Indicator	Green	Normal	
	Red	Abnormal	
Weight (kg)	1phase	0.3	
	3phase	1.3	

* 세부 Model은 모델구분표 참조

Dimension

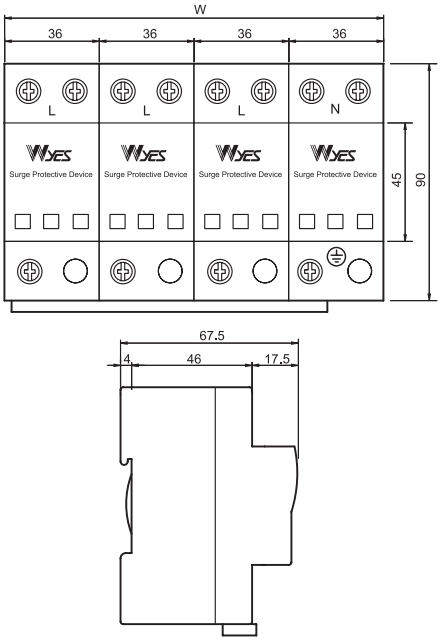

W : 1P - 36mm
2P - 72mm
3P - 108mm
4P - 144mm

Circuit diagram

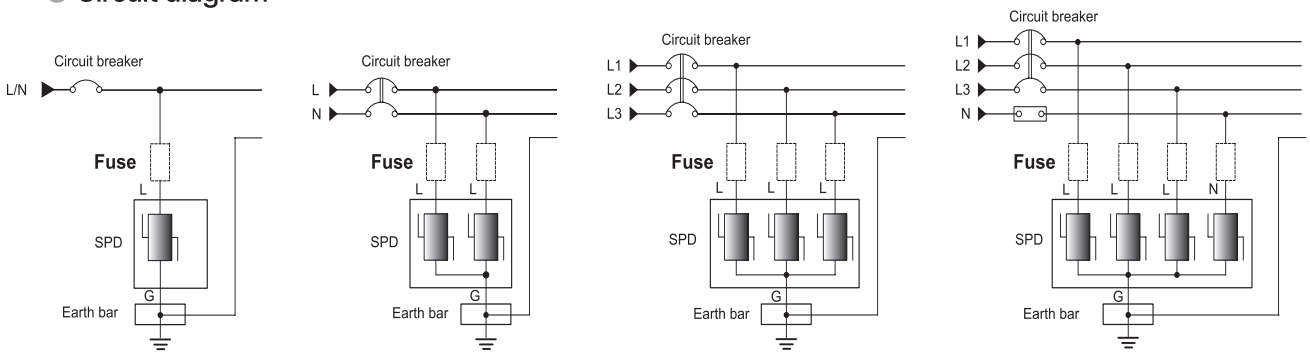

단상(1P2W)
(1phase type)

단상접지(1P2W)
(1phase earthed type)

삼상접지(3P3W)
(3phase earthed type)

삼상N접지(3P4W)
(3phase N-earthed type)

단상, 삼상 모듈형 220, 380V Module type 120/160kA series

RoHS

Specification

ITEM \ MODEL		WYPC4120T380	WYPC4160T380
Pole		1, 2, 3, 4 Pole	
Nominal voltage (Un)		380VAC	
Max. continuous operating voltage (Uc)		385VAC	
Voltage protection level (Up)		≤ 2.5	
Rated frequency (Fo)		50 / 60Hz	
Max. discharge current (Imax)		120kA	160kA
Nominal discharge current (In)		60kA	80kA
Max. impulse current (Iimp)		12.5 / 15kA	
Protection level		Class II, III	
Protection mode		L, N−G	
Operating temperature range		−40 ~ 90°C	
Operating Humidity		35 ~ 85%RH	
Storage temperature range		−40 ~ 125°C	
Attachment method		Din−rail type	
Wire size for connections		Phase, neutral : >10mm² / Earth wire : >16mm²	
Response time		< 25 nano second	
Indicator	Green	Normal	
	Red	Abnormal	
Weight (kg)	1phase	0.3	
	3phase	1.3	

* 세부 Model은 모델구분표 참조

Dimension

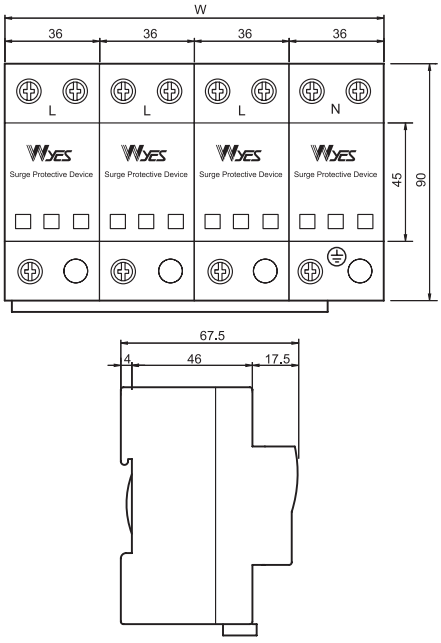

W : 1P - 36mm
2P - 72mm
3P - 108mm
4P - 144mm

Circuit diagram

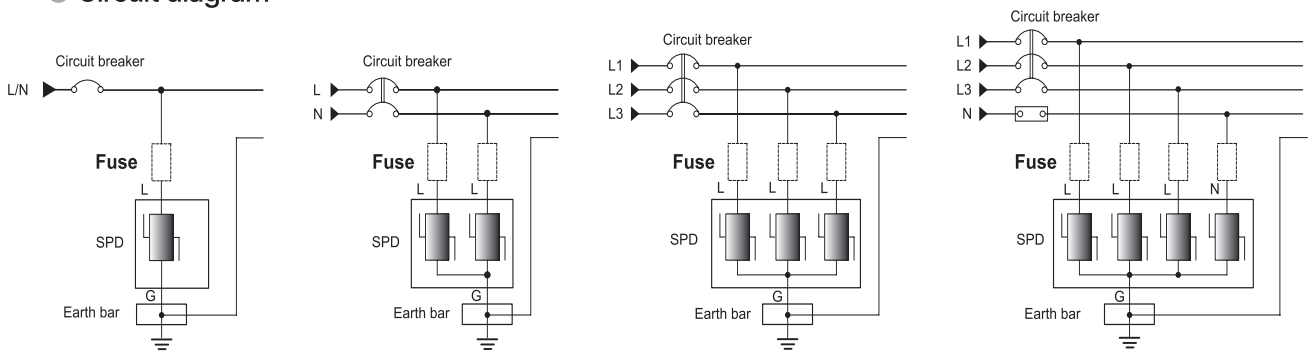

단상(1P2W)
(1phase type)

단상접지(1P2W)
(1phase earthed type)

삼상접지(3P3W)
(3phase earthed type)

삼상N접지(3P4W)
(3phase N-earthed type)

단상 일반형(1P2W) 110, 220, 380, 440V General type 2~70kA series

CE RoHS

Connection

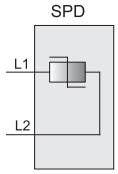

Specification

ITEM / MODEL	Nominal voltage (Un)	Max. continuous operating voltage (Uc)	Max. discharge current (Imax)	Nominal discharge current (In)	Voltage protction level (Up)	Dimension	Weight (kg)
WYPA1002T012	DC12V	DC14V	2kA	1kA	<28V	A	0.04
WYPA1003T024	DC24V	DC45V	3kA	1.5kA	<64V		
WYPA1010T110	AC110V	AC130V	10kA	5kA	<1.5kV		
WYPA1010T220	AC220V	AC300V					
WYPA1010T380	AC380V	AC510V					
WYPA1010T440	AC440V	AC625V					
WYPA1015T110	AC110V	AC130V	15kA	7.5kA			
WYPA1015T220	AC220V	AC300V					
WYPA1015T380	AC380V	AC510V					
WYPA1015T440	AC440V	AC625V					
WYPA1025T110	AC110V	AC130V	25kA	12.5kA			
WYPA1025T220	AC220V	AC300V					
WYPA1025T380	AC380V	AC510V					
WYPA1025T440	AC440V	AC625V					
WYPA1040T110	AC110V	AC130V	40kA	20kA			
WYPA1040T220	AC220V	AC300V					
WYPA1040T380	AC380V	AC510V					
WYPA1040T440	AC440V	AC625V					
WYPA1070T110	AC110V	AC130V	70kA	35kA		B	0.07
WYPA1070T220	AC220V	AC300V					
WYPA1070T380	AC380V	AC510V					
WYPA1070T440	AC440V	AC625V					

Dimension

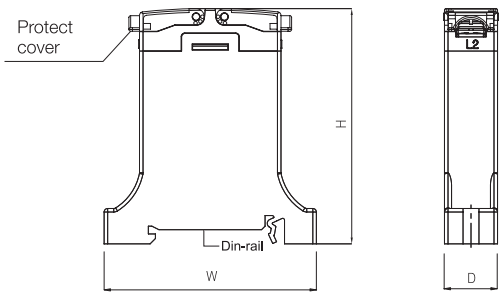

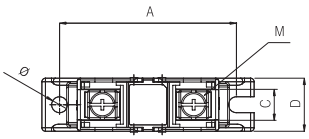

TYPE	W	D	H	A	C	M	Ø
A	60	15	66.5	50	8.5	3.5	4.5
B	90	20	91.5	75	13	5	5.5

Terminal

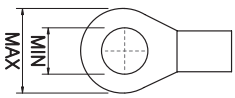

A Type : Max 8, Min 3.5
B Type : Max 13, Min 5

단상접지 일반형(1P2W) 220, 380, 440V General type 10~70kA series

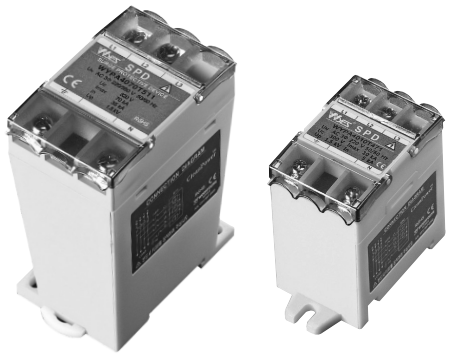

Connection

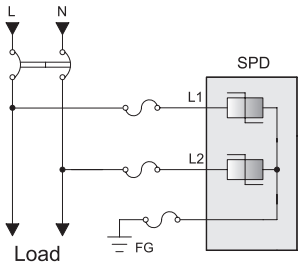

단상접지
(1phase earthed type)

Specification

ITEM / MODEL	Nominal voltage (Un)	Max. continuous operating voltage (Uc)	Max. discharge current (Imax)	Nominal discharge current (In)	Voltage protction level (Up)	Dimension	Weight (kg)
WYPA2010T220	AC220V	AC300V	10kA	5kA	<1.5kV	A	0.1
WYPA2010T380	AC380V	AC510V					
WYPA2010T440	AC440V	AC625V					
WYPA2015T220	AC220V	AC275V	15kA	7.5kA			0.2
WYPA2015T380	AC380V	AC510V					
WYPA2015T440	AC440V	AC625V					
WYPA2025T220	AC220V	AC275V	25kA	12.5kA		B	0.3
WYPA2025T380	AC380V	AC510V					
WYPA2025T440	AC440V	AC625V					
WYPA2040T220	AC220V	AC275V	40kA	20kA			0.4
WYPA2040T380	AC380V	AC510V					
WYPA2040T440	AC440V	AC625V					
WYPA2070T220	AC220V	AC320V	70kA	35kA			0.5
WYPA2070T380	AC380V	AC510V					
WYPA2070T440	AC440V	AC625V					

Dimension

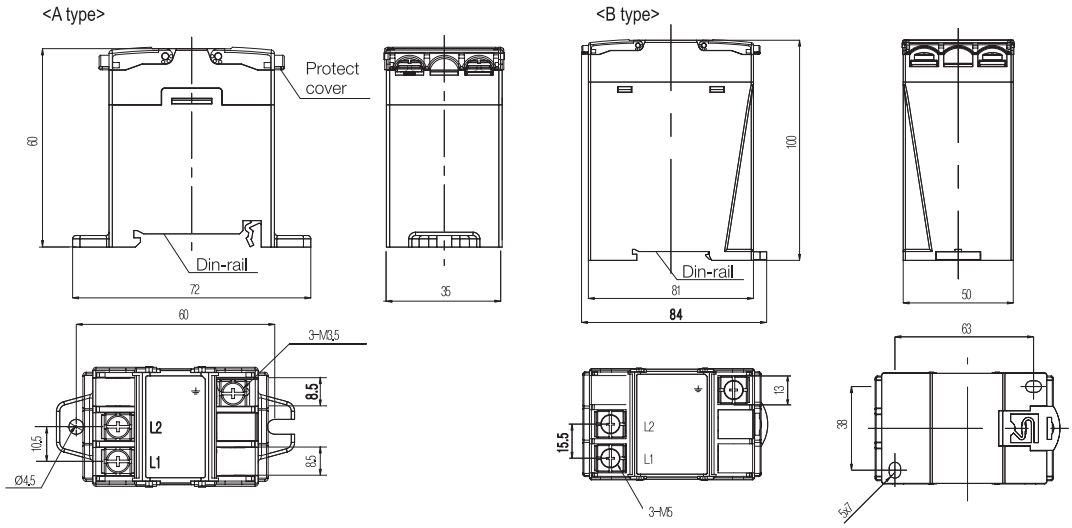

Terminal

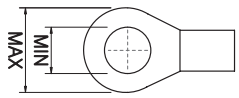

A Type : Max 8, Min 3.5
B Type : Max 13, Min 5

삼상접지 일반형(3P3W) 220, 380, 440V General type 10~70kA series

CE RoHS

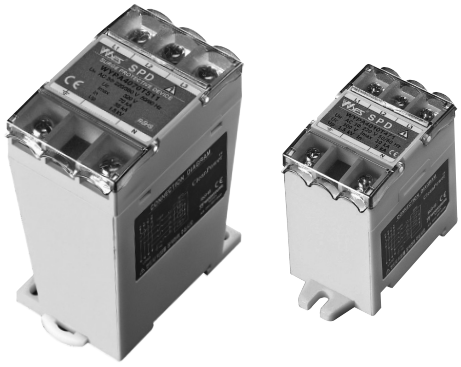

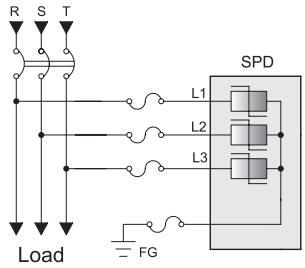

삼상접지
(3phase earthed type)

Specification

ITEM / MODEL	Nominal voltage (Un)	Max. continuous operating voltage (Uc)	Max. discharge current (Imax)	Nominal discharge current (In)	Voltage protction level (Up)	Dimension	Weight (kg)
WYPA3010T220	AC220V	AC300V	10kA	5kA	<1.5kV	A	0.3
WYPA3010T380	AC380V	AC510V					
WYPA3010T440	AC440V	AC625V					
WYPA3015T220	AC220V	AC275V	15kA	7.5kA			
WYPA3015T380	AC380V	AC510V					
WYPA3015T440	AC440V	AC625V					
WYPA3025T220	AC220V	AC275V	25kA	12.5kA		B	0.4
WYPA3025T380	AC380V	AC510V					
WYPA3025T440	AC440V	AC625V					
WYPA3040T220	AC220V	AC275V	40kA	20kA			0.5
WYPA3040T380	AC380V	AC510V					
WYPA3040T440	AC440V	AC625V					
WYPA3070T220	AC220V	AC320V	70kA	35kA			0.6
WYPA3070T380	AC380V	AC510V					
WYPA3070T440	AC440V	AC625V					

Dimension

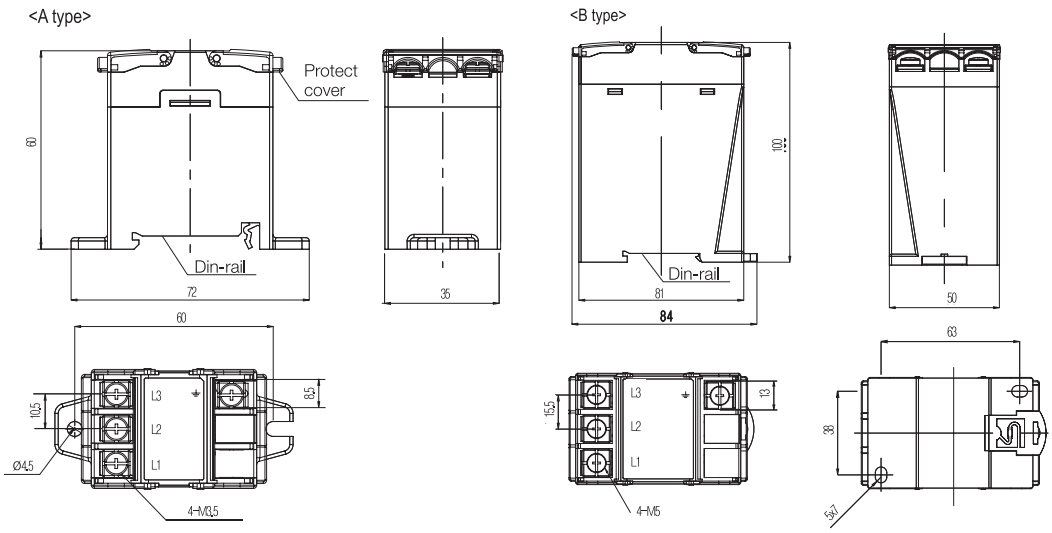

Terminal

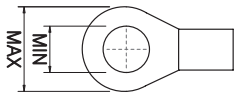

A Type : Max 8, Min 3.5
B Type : Max 13, Min 5

삼상N접지 일반형(3P4W) 380/220V General type 10~70kA series

CE RoHS

Connection

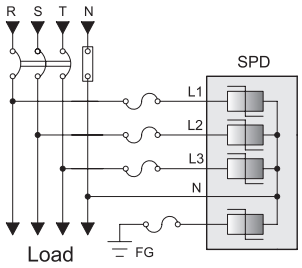

삼상N접지
(3phase N-earthed type)

Specification

ITEM / MODEL	Nominal voltage (Un)	Max. continuous operating voltage (Uc)	Max. discharge current (Imax)	Nominal discharge current (In)	Voltage protction level (Up)	Dimension	Weight (kg)
WYPA4010T380	AC380V / 220V	AC600V / 300V	10kA	5kA	<1.5kV	A	0.5
WYPA4015T380		AC550V / 275V	15kA	7.5kA			
WYPA4025T220		AC550V / 275V	25kA	12.5kA		B	0.8
WYPA4040T380		AC550V / 275V	40kA	20kA			
WYPA4075T440		AC550V / 320V	70kA	35kA			

Dimension

<A type>

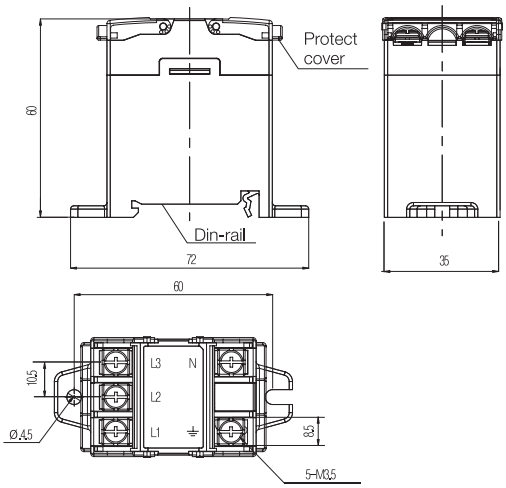

<B type>

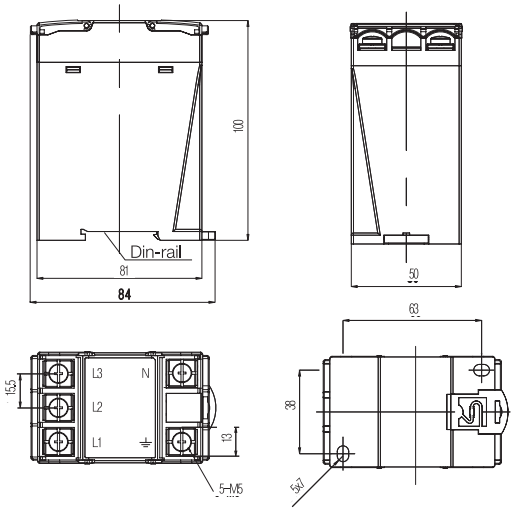

Terminal

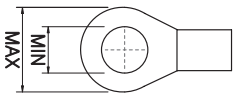

A Type : Max 8, Min 3.5
B Type : Max 13, Min 5

단상접지 카운터형(1P2W) 220V Counter type 20/40kA series

CE RoHS

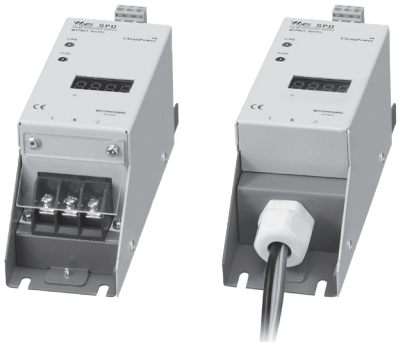

Connection

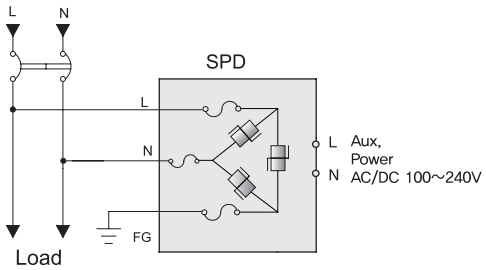

단상접지
(1phase earthed type)

Specification

ITEM \ MODEL		WYPB2020T220C / L220C	WYPB2040T220C / L220C
Nominal voltage (Un)		Single phase 220VAC	
Aux, Power		AC / DC 100 ~ 240V	
Max. continuous operating voltage (Uc)		320VAC	
Voltage protection level (Up)		〈1.2kV@20kV / 10kA (IEC61643-1)	
Rated frequency (Fo)		50 / 60Hz	
Max. discharge current (Imax)		20kA	40kA
Nominal discharge current (In)		10kA	20kA
Max. impulse current (Iimp)		–	
Protection level		Class II, III	
Protection mode		L-N, L-G, N-G	
Operating temperature range		-40 ~ 90°C	
Operating Humidity		35 ~ 85%RH	
Storage temperature range		-40 ~ 125°C	
Fuse		Thermal runaway fuse	
Connection type		T : Terminal type / L : Lead type	
Connection mode		Parallel connection type	
Wire size for connections		2.5mm²	4mm²
Response time		〈 25 nano second	
Indicator LED	Green	Power lamp	
	Red	Fuse off at lamp on (이상시 램프'on')	
Weight (kg)		0.7	

*** Model type** T : Terminal Type, L : Lead wire Type

Dimension

- PB type -

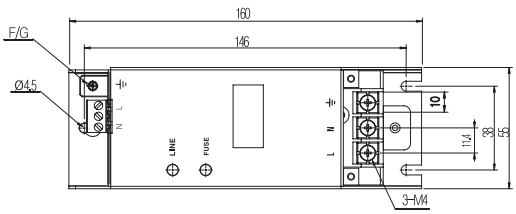

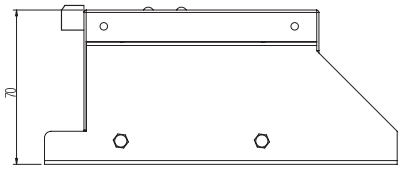

<Lead type>

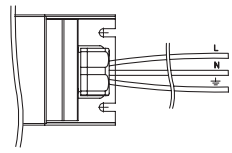

20kA-KIV insulation wire 2.5㎟
40kA-KIV insulation wire 4㎟

Line	Color	Lead
L	White	60cm
N	Black	60cm
⏚	Green / Yellow	1m

Terminal

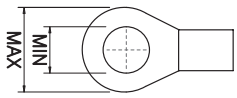

Max 9, Min 4

단상접지 카운터형(1P2W) 220V Counter type 80/100/120kA series

CE RoHS

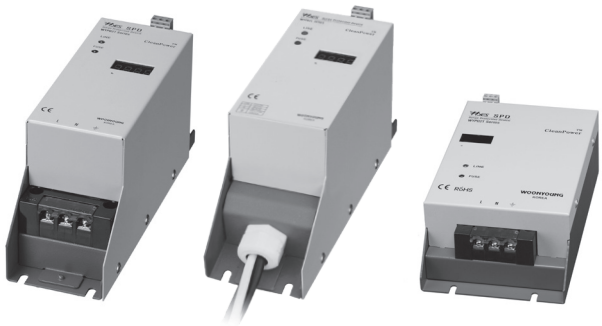

Connection

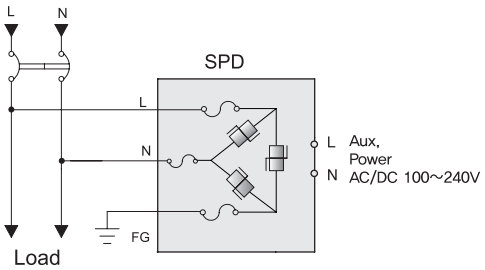

단상접지
(1phase earthed type)

Specification

ITEM \ MODEL		WYPB2080T220C / L220C WYPD2080T220C / L220C	WYPB2100T220C / L220C WYPD2100T220C / L220C	WYPB2120T220C / L220C WYPD2120T220C / L220C
Nominal voltage (Un)		Single phase 220VAC		
Aux, Power		AC / DC 100 ~ 240V		
Max. continuous operating voltage (Uc)		320VAC		
Voltage protection level (Up)		〈1.2kV@20kV / 10kA (IEC61643－1)		
Rated frequency (Fo)		50 / 60Hz		
Max. discharge current (Imax)		80kA	100kA	120kA
Nominal discharge current (In)		40kA	50kA	60kA
Max. impulse current (Iimp)		–		
Protection level		Class II, III		
Protection mode		L－N, L－G, N－G		
Operating temperature range		－40 ~ 90°C		
Operating Humidity		35 ~ 85%RH		
Storage temperature range		－40 ~ 125°C		
Fuse		Thermal runaway fuse		
Connection type		T : Terminal type / L : Lead type		
Connection mode		Parallel connection type		
Wire size for connections		6mm²		10mm²
Response time		〈 25 nano second		
Indicator LED	Green	Power lamp		
	Red	Fuse off at lamp on (이상시 램프'on')		
Weight (kg)		1.8		

* **Model type** T : Terminal Type, L : Lead wire Type

Dimension

- PB type -

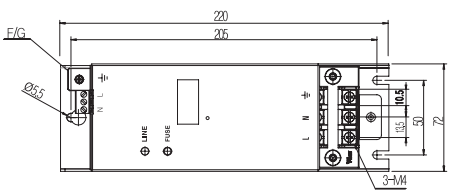

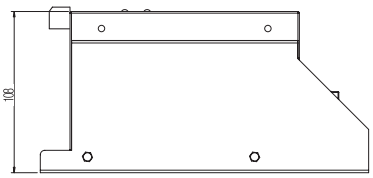

<Lead type>

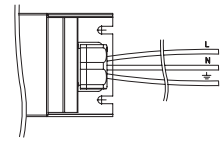

80/100kA-KIV insulation wire 6㎟
120kA-KIV insulation wire 10㎟

Line	Color	Lead
L	White	60cm
N	Black	60cm
⏚	Green / Yellow	1m

- PD type -

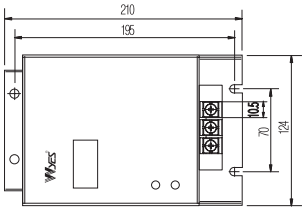

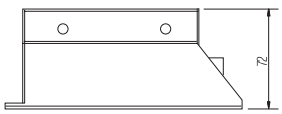

Terminal

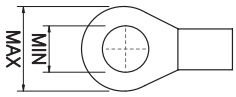

Max 10, Min 4

단상접지 카운터형(1P2W) 380V, 440/480V Counter type 20/40kA series

CE RoHS

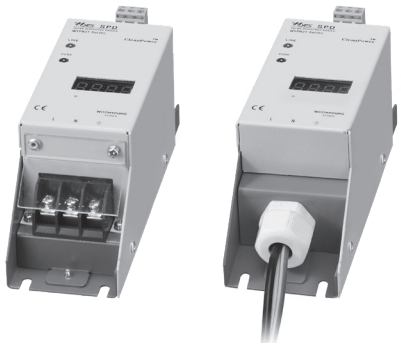

Connection

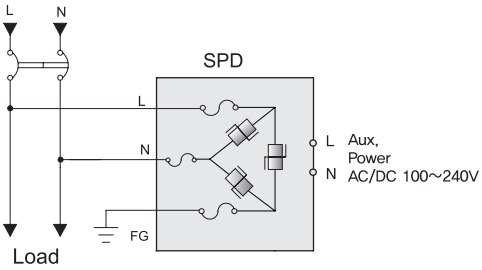

단상접지
(1phase earthed type)

Specification

ITEM \ MODEL		WYPB2020T380C / L380C WYPB2020T440C / L440C	WYPB2040T380C / L380C WYPB2040T440C / L440C
Nominal voltage (Un)		Single phase 380VAC, 440 / 480VAC	
Aux, Power		AC / DC 100 ~ 240V	
Max. continuous operating voltage (Uc)		460 / 625VAC	
Voltage protection level (Up)		〈1.2kV@20kV / 10kA (IEC61643－1)	
Rated frequency (Fo)		50 / 60Hz	
Max. discharge current (Imax)		20kA	40kA
Nominal discharge current (In)		10kA	20kA
Max. impulse current (Iimp)		–	
Protection level		Class II, III	
Protection mode		L－N, L－G, N－G	
Operating temperature range		－40 ~ 90°C	
Operating Humidity		35 ~ 85%RH	
Storage temperature range		－40 ~ 125°C	
Fuse		Thermal runaway fuse	
Connection type		T : Terminal type / L : Lead type	
Connection mode		Parallel connection type	
Wire size for connections		2.5mm²	4mm²
Response time		〈 25 nano second	
Indicator LED	Green	Power lamp	
	Red	Fuse off at lamp on (이상시 램프'on')	
Weight (kg)		0.7	

*** Model type** T : Terminal Type, L : Lead wire Type

Dimension

- PB type -

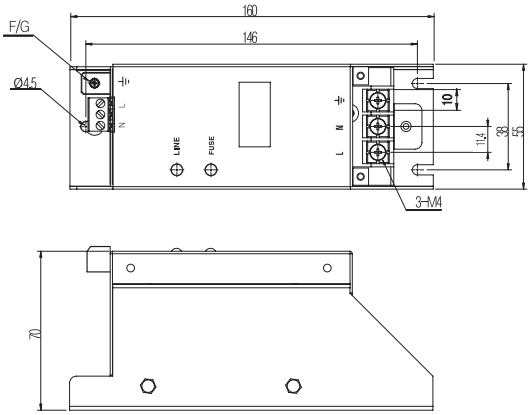

<Lead type>

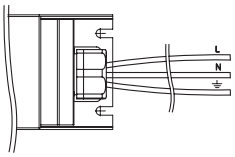

20kA-KIV insulation wire 2.5㎟
40kA-KIV insulation wire 4㎟

Line	Color	Lead
L	White	60cm
N	Black	60cm
⏚	Green / Yellow	1m

Terminal

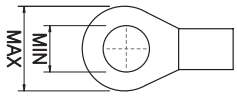

Max 9, Min 4

단상접지 카운터형(1P2W) 380V, 440/480V Counter type 80/100/120kA series CE RoHS

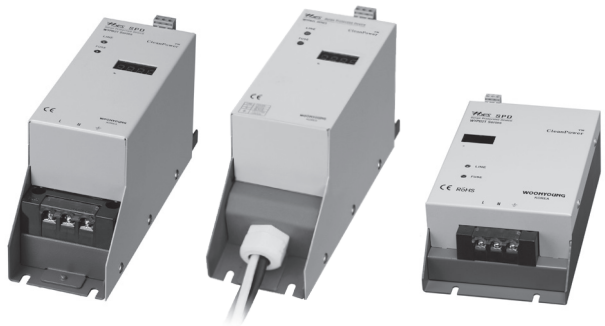

Connection

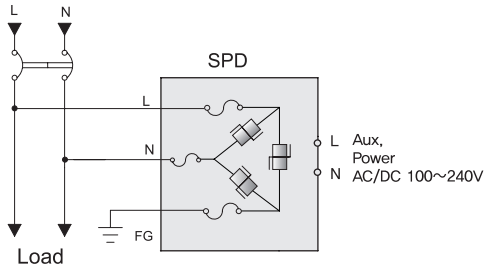

단상접지
(1phase earthed type)

Specification

ITEM \ MODEL		WYPB2080T380C / L380C WYPB2080T440C / L440C	WYPB2100T380C / L380C WYPB2100T440C / L440C	WYPB2120T380C / L380C WYPB2120T440C / L440C
		WYPD2080T380C / L380C WYPD2080T440C / L440C	WYPD2100T380C / L380C WYPD2100T440C / L440C	WYPD2120T380C / L380C WYPD2120T440C / L440C
Nominal voltage (Un)		Single phase 380VAC, 440 / 480VAC		
Aux, Power		AC / DC 100 ~ 240V		
Max. continuous operating voltage (Uc)		460 / 625VAC		
Voltage protection level (Up)		〈1.2kV@20kV / 10kA (IEC61643－1)		
Rated frequency (Fo)		50 / 60Hz		
Max. discharge current (Imax)		80kA	100kA	120kA
Nominal discharge current (In)		40kA	50kA	60kA
Max. impulse current (Iimp)		–		
Protection level		Class II, III		
Protection mode		L－N, L－G, N－G		
Operating temperature range		－40 ~ 90°C		
Operating Humidity		35 ~ 85%RH		
Storage temperature range		－40 ~ 125°C		
Fuse		Thermal runaway fuse		
Connection type		T : Terminal type / L : Lead type		
Connection mode		Parallel connection type		
Wire size for connections		6mm²		10mm²
Response time		〈 25 nano second		
Indicator LED	Green	Power lamp		
	Red	Fuse off at lamp on (이상시 램프'on')		
Weight (kg)		1.8		

* **Model type** T : Terminal Type, L : Lead wire Type

Dimension

- PB type -

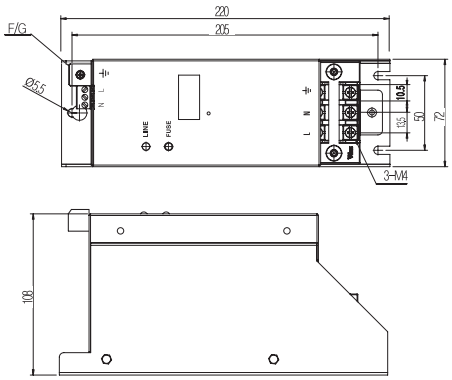

<Lead type>

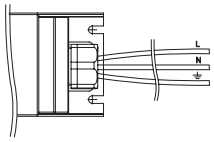

80/100kA-KIV insulation wire 6㎟
120kA-KIV insulation wire 10㎟

Line	Color	Lead
L	White	60cm
N	Black	60cm
⏚	Green / Yellow	1m

- PD type -

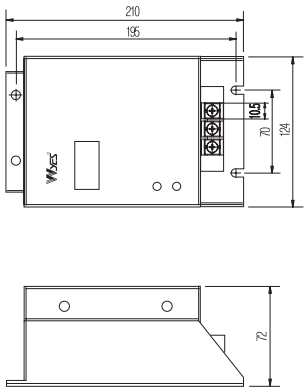

Terminal

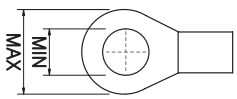

Max 10, Min 4

삼상접지 카운터형(3P3W) 220V Counter type 20/40kA series

CE RoHS

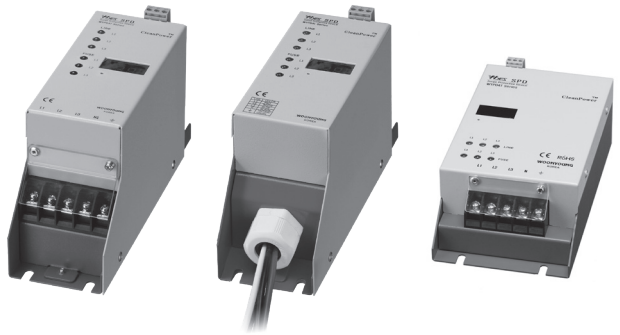

Connection

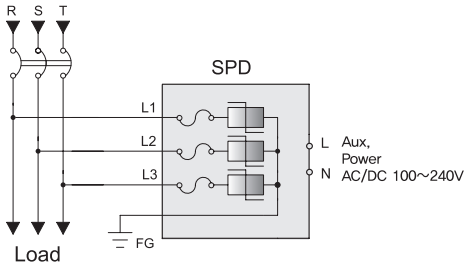

삼상접지
(3phase earthed type)

Specification

MODEL / ITEM		WYPB3020T220C WYPB3020L220C WYPD3020T220C WYPD3020L220C	WYPB3040T220C WYPB3040L220C WYPD3040T220C WYPD3040L220C
Nominal voltage (Un)		Three phase 220VAC	
Aux, Power		AC / DC 100 ~ 240V	
Max. continuous operating voltage (Uc)		320VAC	
Voltage protection level (Up)		〈1.2kV@20kV / 10kA (IEC61643－1)	
Rated frequency (Fo)		50 / 60Hz	
Max. discharge current (Imax)		20kA	40kA
Nominal discharge current (In)		10kA	20kA
Max. impulse current (Iimp)		–	
Protection level		Class II, III	
Protection mode		L－L, L－G	
Operating temperature range		－40 ~ 90°C	
Operating Humidity		35 ~ 85%RH	
Storage temperature range		－40 ~ 125°C	
Fuse		Thermal runaway fuse	
Connection type		T : Terminal type / L : Lead type	
Connection mode		Parallel connection type	
Wire size for connections		2.5mm²	4mm²
Response time		〈 25 nano second	
Indicator LED	Green	Power lamp	
	Red	Fuse off at lamp on (이상시 램프'on')	
Weight (kg)		1.1	

*** Model type** T : Terminal Type, L : Lead wire Type

Dimension

- PB type -

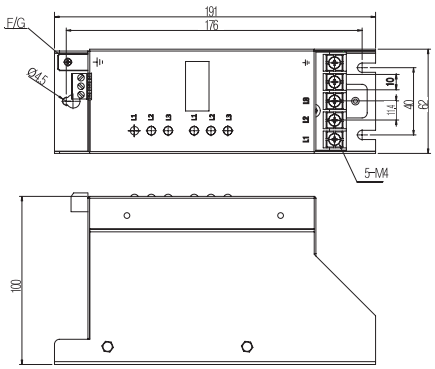

<Lead type>

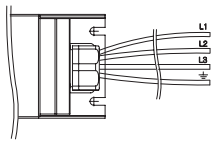

20kA-KIV insulation wire 2.5㎟
40kA-KIV insulation wire ㎟

Line	Color	Lead
L1	Red	60cm
L2	White	60cm
L3	Blue	60cm
⏚	Green / Yellow	1m

- PD type -

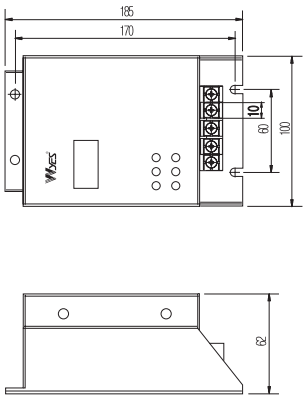

Terminal

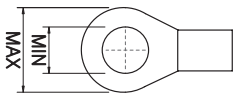

Max 9, Min 4

삼상접지 카운터형(3P3W) 220V Counter type 80~240kA series

CE RoHS

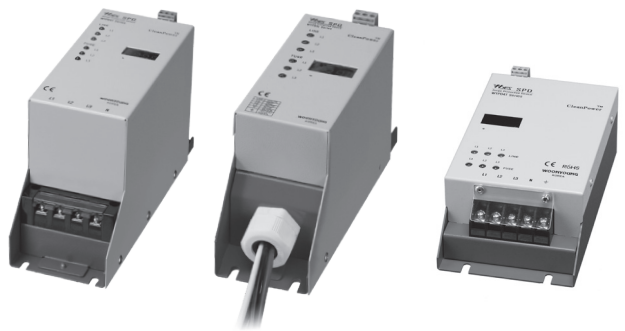

Connection

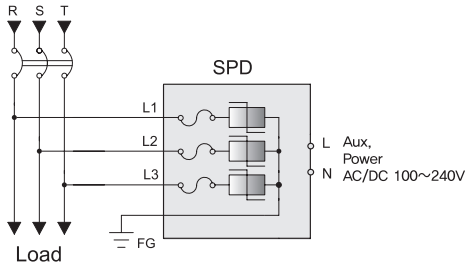

삼상접지
(3phase earthed type)

Specification

ITEM \ MODEL	WYPB3080T220C WYPB3080L220C WYPD3080T220C WYPD3080L220C	WYPB3100T220C WYPB3100L220C WYPD3100T220C WYPD3100L220C	WYPB3120T220C WYPB3120L220C WYPD3120T220C WYPD3120L220C	WYPB3160T220C WYPB3160L220C WYPD3160T220C WYPD3160L220C	WYPB3200T220C WYPB3200L220C WYPD3200T220C WYPD3200L220C	WYPB3240T220C WYPB3240L220C WYPD3240T220C WYPD3240L220C
Nominal voltage (Un)	Three phase 220VAC					
Aux, Power	AC / DC 100 ~ 240V					
Max. continuous operating voltage (Uc)	320VAC					
Voltage protection level (Up)	〈2.1kV@20kV / 10kA (IEC61643－1)					
Rated frequency (Fo)	50 / 60Hz					
Max. discharge current (Imax)	80kA	100kA	120kA	160kA	200kA	240kA
Nominal discharge current (In)	40kA	50kA	60kA	80kA	100kA	120kA
Max. impulse current (Iimp)	–				12.5kA	
Protection level	Class II, III				Class I, II, III	
Protection mode	L－L, L－G					
Operating temperature range	－40 ~ 90°C					
Operating Humidity	35 ~ 85%RH					
Storage temperature range	－40 ~ 125°C					
Fuse	Thermal runaway fuse					
Connection type	T : Terminal type / L : Lead type					
Connection mode	Parallel connection type					
Wire size for connections	6mm²		10mm²			
Response time	〈 25 nano second					
Indicator LED – Green	Power lamp					
Indicator LED – Red	Fuse off at lamp on (이상시 램프'on')					
Weight (kg)	2.3					

*** Model type** T : Terminal Type, L : Lead wire Type

Dimension

- PB type -

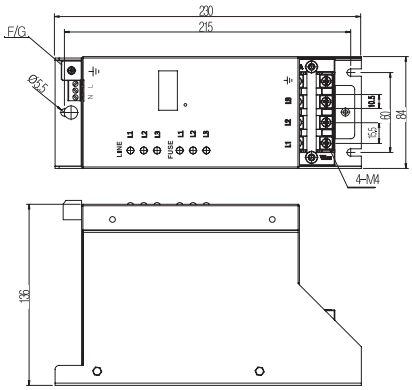

<Lead type>

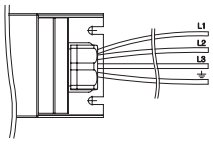

80/100kA-KIV insulation wire 6㎟
120/160/200/240kA-KIV insulation wire 10㎟

Line	Color	Lead
L1	Red	60cm
L2	White	60cm
L3	Blue	60cm
⏚	Green / Yellow	1m

- PD type -

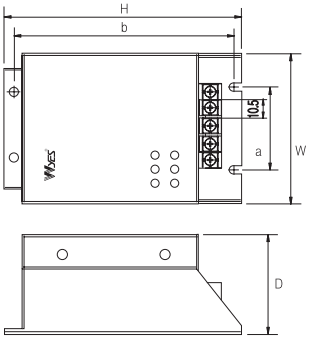

Type	W	H	D	a	b
80~100kA	120	190	70	70	175
120~240kA	135	230	84	70	215

Terminal

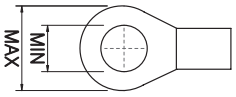

Max 10, Min 4

삼상접지 카운터형(3P3W) 380V, 440/480V Counter type 20/40kA series

CE RoHS

Connection

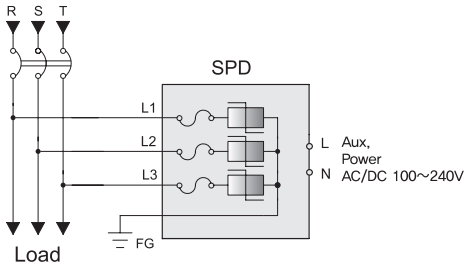

삼상접지
(3phase earthed type)

Specification

MODEL / ITEM		WYPB3020T380C / L380C WYPB3020T440C / L440C WYPD3020T380C / L380C WYPD3020T440C / L440C	WYPB3040T380C / L380C WYPB3040T440C / L440C WYPD3040T380C / L380C WYPD3040T440C / L440C
Nominal voltage (Un)		Three phase 380VAC, 440 / 480VAC	
Aux, Power		AC / DC 100 ~ 240V	
Max. continuous operating voltage (Uc)		460 / 625VAC	
Voltage protection level (Up)		〈1.2kV@20kV / 10kA (IEC61643－1)	
Rated frequency (Fo)		50 / 60Hz	
Max. discharge current (Imax)		20kA	40kA
Nominal discharge current (In)		10kA	20kA
Max. impulse current (Iimp)		–	
Protection level		Class II, III	
Protection mode		L－L, L－G	
Operating temperature range		－40 ~ 90°C	
Operating Humidity		35 ~ 85%RH	
Storage temperature range		－40 ~ 125°C	
Fuse		Thermal runaway fuse	
Connection type		T : Terminal type / L : Lead type	
Connection mode		Parallel connection type	
Wire size for connections		2.5mm²	4mm²
Response time		〈 25 nano second	
Indicator LED	Green	Power lamp	
	Red	Fuse off at lamp on (이상시 램프'on')	
Weight (kg)		1.1	

*** Model type** T : Terminal Type, L : Lead wire Type

Dimension

- PB type -

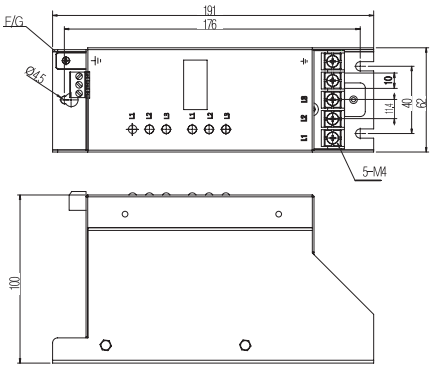

<Lead type>

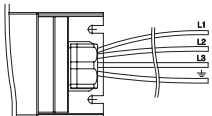

20kA-KIV insulation wire 2.5㎟
40kA-KIV insulation wire ㎟

Line	Color	Lead
L1	Red	60cm
L2	White	60cm
L3	Blue	60cm
⏚	Green / Yellow	1m

- PD type -

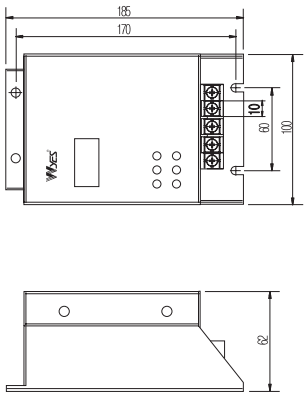

Terminal

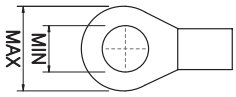

Max 9, Min 4

삼상접지 카운터형(3P3W) 380V, 440/480V Counter type 80~240kA series

CE RoHS

Connection

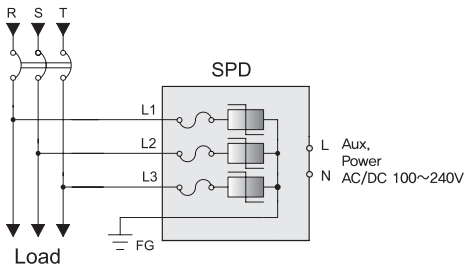

삼상접지
(3phase earthed type)

Specification

ITEM \ MODEL		WYPB3080T380C/L380C WYPB3080T440C/L440C WYPD3080T380C/L380C WYPD3080T440C/L440C	WYPB3100T380C/L380C WYPB3100T440C/L440C WYPD3100T380C/L380C WYPD3100T440C/L440C	WYPB3120T380C/L380C WYPB3120T440C/L440C WYPD3120T380C/L380C WYPD3120T440C/L440C	WYPB3160T380C/L380C WYPB3160T440C/L440C WYPD3160T380C/L380C WYPD3160T440C/L440C	WYPB3200T380C/L380C WYPB3200T440C/L440C WYPD3200T380C/L380C WYPD3200T440C/L440C	WYPB3240T380C/L380C WYPB3240T440C/L440C WYPD3240T380C/L380C WYPD3240T440C/L440C
Nominal voltage (Un)		Three phase 380VAC, 440/480VAC					
Aux, Power		AC/DC 100～240V					
Max. continuous operating voltage (Uc)		460/625VAC					
Voltage protection level (Up)		〈2.1kV@20kV/10kA (IEC61643－1)					
Rated frequency (Fo)		50/60Hz					
Max. discharge current (Imax)		80kA	100kA	120kA	160kA	200kA	240kA
Nominal discharge current (In)		40kA	50kA	60kA	80kA	100kA	120kA
Max. impulse current (Iimp)		–				12.5kA	
Protection level		Class II, III				Class I, II, III	
Protection mode		L－L, L－G					
Operating temperature range		－40～90°C					
Operating Humidity		35～85%RH					
Storage temperature range		－40～125°C					
Fuse		Thermal runaway fuse					
Connection type		T : Terminal type / L : Lead type					
Connection mode		Parallel connection type					
Wire size for connections		6mm²		10mm²			
Response time		〈 25 nano second					
Indicator LED	Green	Power lamp					
	Red	Fuse off at lamp on (이상시 램프'on')					
Weight (kg)		2.3					

*** Model type** T : Terminal Type, L : Lead wire Type

Dimension

- PB type -

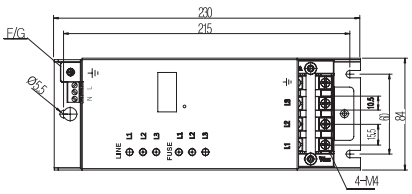

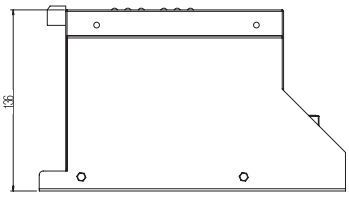

<Lead type>

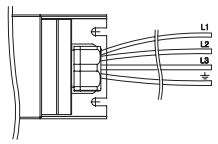

80/100kA-KIV insulation wire 6㎟
120/160/200/240kA-KIV insulation wire 10㎟

Line	Color	Lead
L1	Red	60cm
L2	White	60cm
L3	Blue	60cm
⏚	Green / Yellow	1m

- PD type -

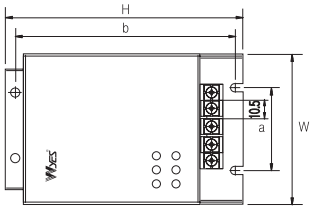

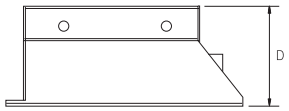

Type	W	H	D	a	b
80~100kA	120	190	70	70	175
120~240kA	135	230	84	70	215

Terminal

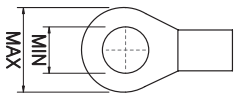

Max 10, Min 4

삼상N접지 카운터형(3P4W) 380V N-earthed counter type 20/40kA series

CE RoHS

Connection

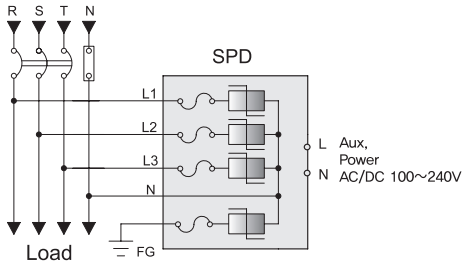

삼상N접지
(3phase N-earthed type)

Specification

ITEM \ MODEL		WYPB4020T380C WYPB4020L380C WYPD4020T380C WYPD4020L380C	WYPB4040T380C WYPB4040L380C WYPD4040T380C WYPD4040L380C
Nominal voltage (Un)		Three phase 380VAC	
Aux, Power		AC / DC 100 ~ 240V	
Max. continuous operating voltage (Uc)		640VAC	
Voltage protection level (Up)	L-N, N-G	〈1.2kV@20kV / 10kA (IEC61643－1)	
	L-L, L-G	〈2.1kV@20kV / 10kA (IEC61643－1)	
Rated frequency (Fo)		50 / 60Hz	
Max. discharge current (Imax)		20kA	40kA
Nominal discharge current (In)		10kA	20kA
Max. impulse current (Iimp)		–	
Protection level		Class II, III	
Protection mode		L－N, N－G, L－L, L－G	
Operating temperature range		－40 ~ 90°C	
Operating Humidity		35 ~ 85%RH	
Storage temperature range		－40 ~ 125°C	
Fuse		Thermal runaway fuse	
Connection type		T : Terminal type / L : Lead type	
Connection mode		Parallel connection type	
Wire size for connections		2.5mm²	4mm²
Response time		〈 25 nano second	
Indicator LED	Green	Power lamp	
	Red	Fuse off at lamp on (이상시 램프'on')	
Weight (kg)		1.1	

*** Model type** T : Terminal Type, L : Lead wire Type

Dimension

- PB type -

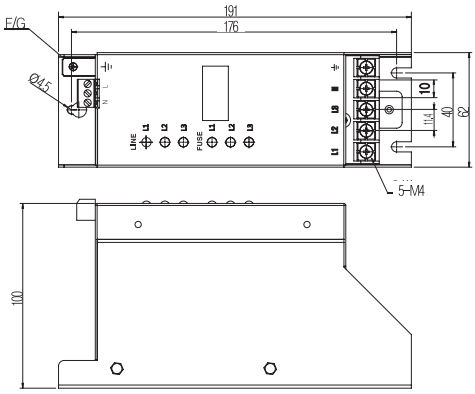

<Lead type>

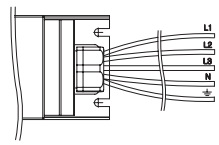

20kA-KIV insulation wire 2.5㎟
40kA-KIV insulation wire 4㎟

Line	Color	Lead
L1	Red	60cm
L2	White	60cm
L3	Blue	60cm
N	Black	60cm
⏚	Green / Yellow	1m

- PD type -

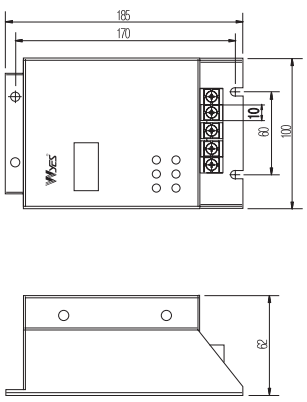

Terminal

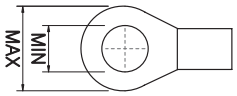

Max 9, Min 4

삼상N접지 카운터형(3P4W) 380V Counter type 80~240kA series

CE RoHS

Connection

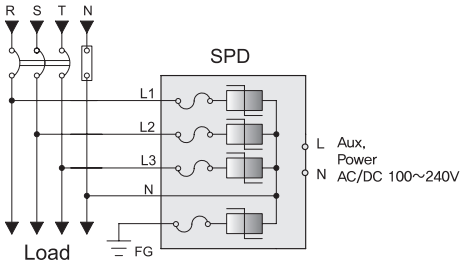

삼상N접지
(3Phase N-earthed type)

Specification

ITEM \ MODEL		WYPB4080T380C WYPB4080L380C WYPD4080T380C WYPD4080L380C	WYPB4100T380C WYPB4100L380C WYPD4100T380C WYPD4100L380C	WYPB4120T380C WYPB4120L380C WYPD4120T380C WYPD4120L380C	WYPB4160T380C WYPB4160L380C WYPD4160T380C WYPD4160L380C	WYPB4200T380C WYPB4200L380C WYPD4200T380C WYPD4200L380C	WYPB4240T380C WYPB4240L380C WYPD4240T380C WYPD4240L380C
Nominal voltage (Un)		Three phase 380VAC					
Aux, Power		AC / DC 100 ~ 240V					
Max. continuous operating voltage (Uc)		640VAC					
Voltage protection level (Up)	L-N, N-G	〈1.2kV@20kV / 10kA (IEC61643－1)					
	L-L, L-G	〈2.1kV@20kV / 10kA (IEC61643－1)					
Rated frequency (Fo)		50 / 60Hz					
Max. discharge current (Imax)		80kA	100kA	120kA	160kA	200kA	240kA
Nominal discharge current (In)		40kA	50kA	60kA	80kA	100kA	120kA
Max. impulse current (Iimp)		–				12.5kA	
Protection level		Class II, III				Class I, II, III	
Protection mode		L－N, N－G, L－L, L－G					
Operating temperature range		－40 ~ 90°C					
Operating Humidity		35 ~ 85%RH					
Storage temperature range		－40 ~ 125°C					
Fuse		Thermal runaway fuse					
Connection type		T : Terminal type / L : Lead type					
Connection mode		Parallel connection type					
Wire size for connections		6mm²		10mm²			
Response time		〈 25 nano second					
Indicator LED	Green	Power lamp					
	Red	Fuse off at lamp on (이상시 램프'on')					
Weight (kg)		2.3					

* **Model type** T : Terminal Type, L : Lead wire Type

Dimension

- PB type -

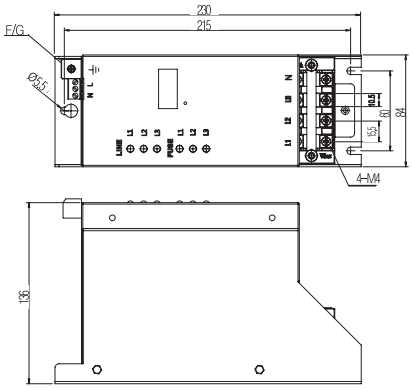

<Lead type>

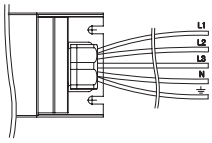

80/100kA-KIV insulation wire 6㎟
120/160/200/240kA-KIV insulation wire 10㎟

Line	Color	Lead
L1	Red	60cm
L2	White	60cm
L3	Blue	60cm
N	Black	60cm
⏚	Green / Yellow	1m

- PD type -

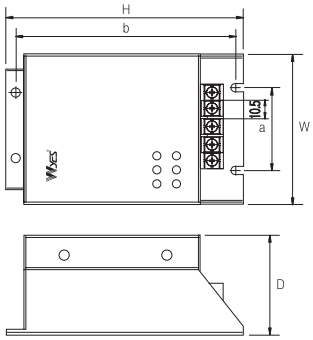

Type	W	H	D	a	b
80~100kA	120	190	70	70	175
120~240kA	135	230	84	70	215

Terminal

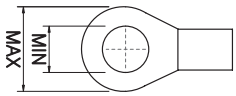

Max 10, Min 4

단상접지 고급형(1P2W) 220V High quality type 20/40kA series

CE RoHS

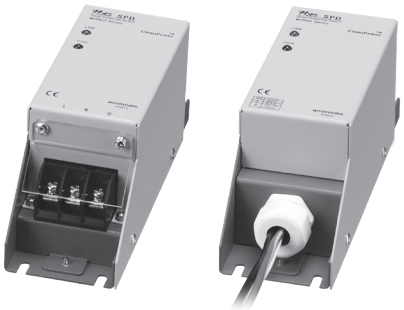

Connection

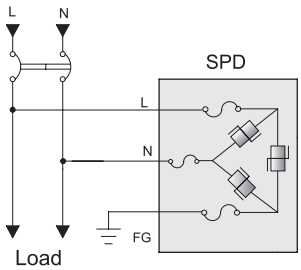

단상접지
(1phase earthed type)

Specification

ITEM \ MODEL		WYPB2020T220 / L220	WYPB2040T220 / L220
Nominal voltage (Un)		Single Phase 220VAC	
Max. continuous operating voltage (Uc)		320VAC	
Voltage protection level (Up)		<1.2kV@20kV / 10kA (IEC61643−1)	
Rated frequency (Fo)		50 / 60Hz	
Max. discharge current (Imax)		20kA	40kA
Nominal discharge current (In)		10kA	20kA
Max. impulse current (Iimp)		–	
Protection level		Class II, III	
Protection mode		L−N, L−G, N−G	
Operating temperature range		−40 ~ 90°C	
Operating Humidity		35 ~ 85%RH	
Storage temperature range		−40 ~ 125°C	
Fuse		Thermal runaway fuse	
Connection type		T : Terminal type / L : Lead type	
Connection mode		Parallel connection type	
Wire size for connections		2.5mm²	4mm²
Response time		< 25 nano second	
Indicator LED	Green	Power lamp	
	Red	Fuse off at lamp on (이상시 램프'on')	
Weight (kg)		0.7	

*** Model type** T : Terminal Type, L : Lead wire Type

Dimension

- PB type -

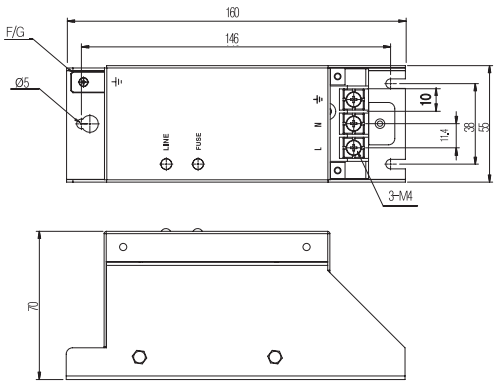

<Lead type>

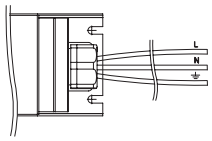

20kA-KIV insulation wire 2.5㎟
40kA-KIV insulation wire 4㎟

Line	Color	Lead
L	White	60cm
N	Black	60cm
⏚	Green / Yellow	1m

Terminal

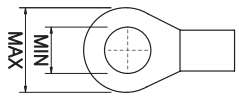

Max 9, Min 4

단상접지 고급형(1P2W) 220V High quality type 80/100/120kA series

CE RoHS

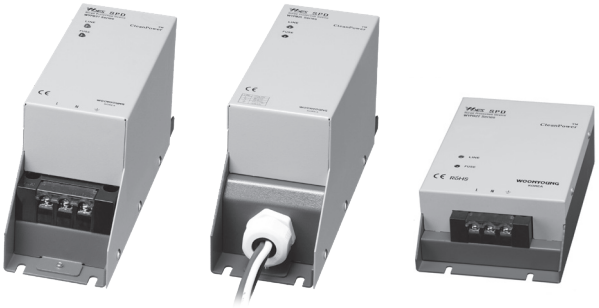

Connection

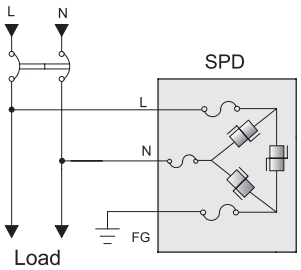

단상접지
(1phase earthed type)

Specification

ITEM \ MODEL		WYPB2080T220 / L220 WYPD2080T220 / L220	WYPB2100T220 / L220 WYPD2100T220 / L220	WYPB2120T220 / L220 WYPD2120T220 / L220
Nominal voltage (Un)		Single phase 220VAC		
Max. continuous operating voltage (Uc)		320VAC		
Voltage protection level (Up)		〈1.2kV@20kV / 10kA (IEC61643－1)		
Rated frequency (Fo)		50 / 60Hz		
Max. discharge current (Imax)		80kA	100kA	120kA
Nominal discharge current (In)		40kA	50kA	60kA
Max. impulse current (Iimp)		–		
Protection level		Class II, III		
Protection mode		L－N, L－G, N－G		
Operating temperature range		－40 ～ 90°C		
Operating Humidity		35 ～ 85%RH		
Storage temperature range		－40 ～ 125°C		
Fuse		Thermal runaway fuse		
Connection type		T : Terminal type / L : Lead type		
Connection mode		Parallel connection type		
Wire size for connections		6mm²		10mm²
Response time		〈 25 nano second		
Indicator LED	Green	Power lamp		
	Red	Fuse off at lamp on (이상시 램프'on')		
Weight (kg)		1.8		

*** Model type** T : Terminal Type, L : Lead wire Type

Dimension

- PB type -

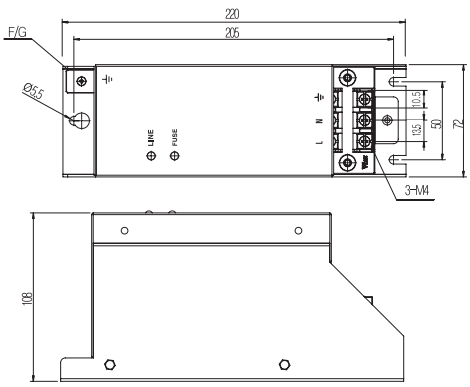

<Lead type>

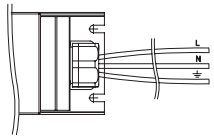

80/100kA-KIV insulation wire 6㎟
120kA-KIV insulation wire 10㎟

Line	Color	Lead
L	White	60cm
N	Black	60cm
⏚	Green / Yellow	1m

- PD type -

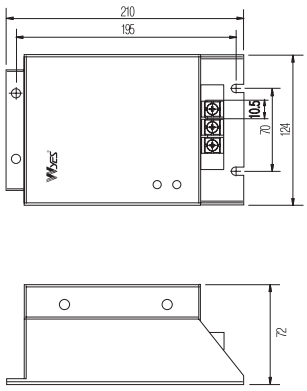

Terminal

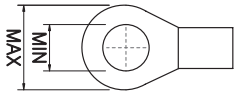

Max 10, Min 4

단상접지 고급형(1P2W) 380, 440V High quality type 20/40kA series

CE RoHS

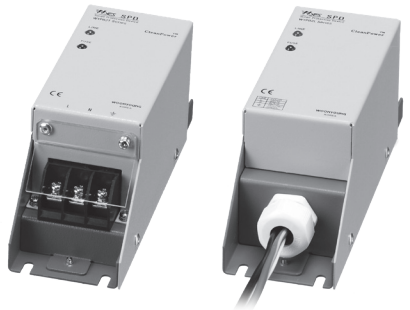

Connection

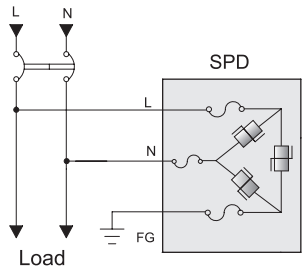

단상접지
(1phase earthed type)

Specification

ITEM \ MODEL		WYPB2020T380 / L380 WYPB2020T440 / L440	WYPB2040T380 / L380 WYPB2040T440 / L440
Nominal voltage (Un)		Single phase 380, 440VAC	
Max. continuous operating voltage (Uc)		460 / 625VAC	
Voltage protection level (Up)		〈1.2kV@20kV / 10kA (IEC61643－1)	
Rated frequency (Fo)		50 / 60Hz	
Max. discharge current (Imax)		20kA	40kA
Nominal discharge current (In)		10kA	20kA
Max. impulse current (Iimp)		–	
Protection level		Class II, III	
Protection mode		L－N, L－G, N－G	
Operating temperature range		－40 ～ 90°C	
Operating Humidity		35 ～ 85%RH	
Storage temperature range		－40 ～ 125°C	
Fuse		Thermal runaway fuse	
Connection type		T : Terminal type / L : Lead type	
Connection mode		Parallel connection type	
Wire size for connections		2.5mm²	4mm²
Response time		〈 25 nano second	
Indicator LED	Green	Power lamp	
	Red	Fuse off at lamp on (이상시 램프'on')	
Weight (kg)		0.7	

* **Model type** T : Terminal Type, L : Lead wire Type

Dimension

- PB type -

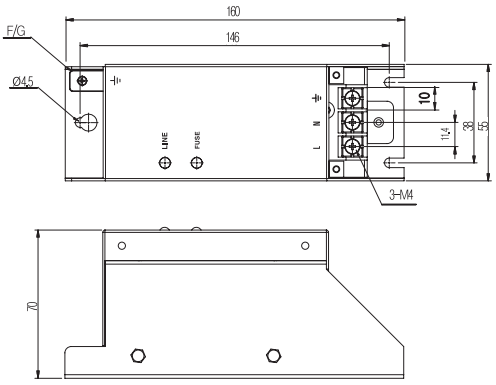

<Lead type>

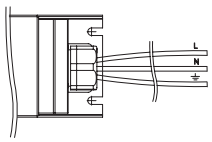

20kA-KIV insulation wire 2.5㎟
40kA-KIV insulation wire 4㎟

Line	Color	Lead
L	White	60cm
N	Black	60cm
⏚	Green / Yellow	1m

Terminal

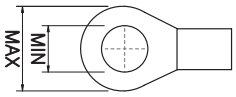

Max 9, Min 4

단상접지 고급형(1P2W) 380, 440V High quality type 80/100/120kA series

CE RoHS

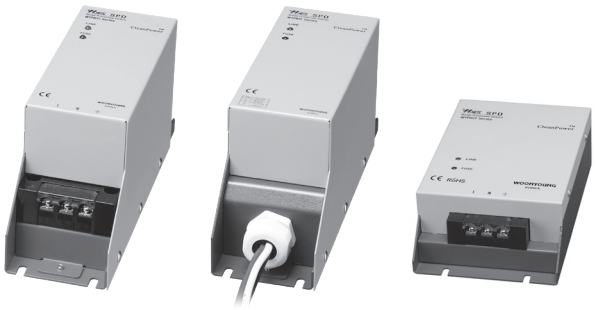

Connection

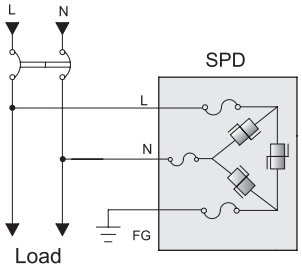

단상접지
(1phase earthed type)

Specification

MODEL / ITEM		WYPB2080T380 / L380 WYPB2080T440 / L440 WYPD2080T380 / L380 WYPD2080T440 / L440	WYPB2100T380 / L380 WYPB2100T440 / L440 WYPD2100T380 / L380 WYPD2100T440 / L440	WYPB2120T380 / L380 WYPB2120T440 / L440 WYPD2120T380 / L380 WYPD2120T440 / L440
Nominal voltage (Un)		Single phase 380, 440VAC		
Max. continuous operating voltage (Uc)		460 / 625VAC		
Voltage protection level (Up)		〈1.2kV@20kV / 10kA (IEC61643－1)		
Rated frequency (Fo)		50 / 60Hz		
Max. discharge current (Imax)		80kA	100kA	120kA
Nominal discharge current (In)		40kA	50kA	60kA
Max. impulse current (Iimp)		–		
Protection level		Class II, III		
Protection mode		L－N, L－G, N－G		
Operating temperature range		－40 ～ 90°C		
Operating Humidity		35 ～ 85%RH		
Storage temperature range		－40 ～ 125°C		
Fuse		Thermal runaway fuse		
Connection type		T : Terminal type / L : Lead type		
Connection mode		Parallel connection type		
Wire size for connections		6mm²		10mm²
Response time		〈 25 nano second		
Indicator LED	Green	Power lamp		
	Red	Fuse off at lamp on (이상시 램프'on')		
Weight (kg)		1.8		

* **Model type** T : Terminal Type, L : Lead wire Type

Dimension

- PB type -

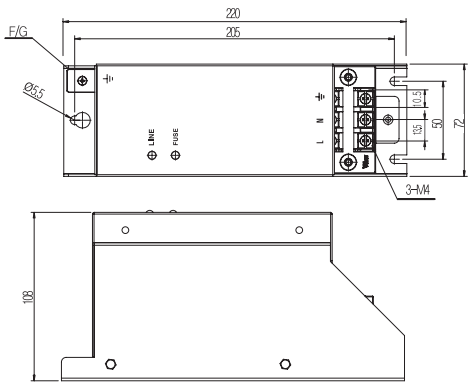

<Lead type>

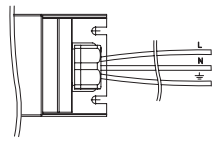

80/100kA-KIV insulation wire 6㎟
120kA-KIV insulation wire 10㎟

Line	Color	Lead
L	White	60cm
N	Black	60cm
⏚	Green / Yellow	1m

- PD type -

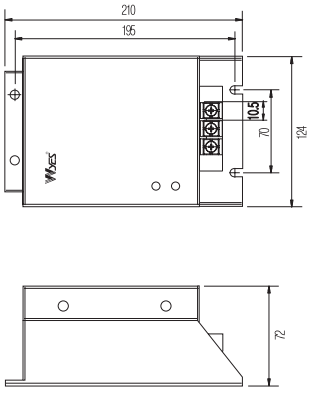

Terminal

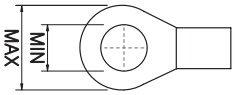

Max 10, Min 4

삼상접지 고급형(3P3W) 220V High quality type 20/40kA series

CE RoHS

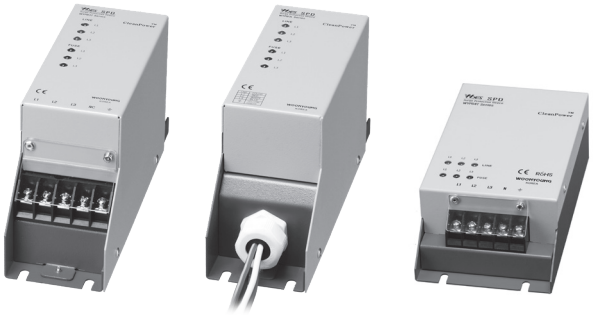

Connection

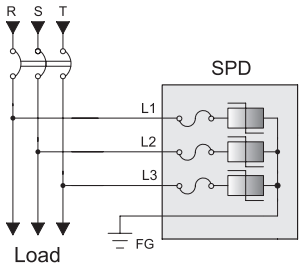

삼상접지
(3phase earthed type)

Specification

ITEM \ MODEL		WYPB3020T220 / L220 WYPD3020T220 / L220	WYPB3040T220 / L220 WYPD3040T220 / L220
Nominal voltage (Un)		Three phase 220VAC	
Max. continuous operating voltage (Uc)		320VAC	
Voltage protection level (Up)		<1.2kV@20kV / 10kA (IEC61643-1)	
Rated frequency (Fo)		50 / 60Hz	
Max. discharge current (Imax)		20kA	40kA
Nominal discharge current (In)		10kA	20kA
Max. impulse current (Iimp)		–	
Protection level		Class II, III	
Protection mode		L-L, L-G	
Operating temperature range		-40 ~ 90°C	
Operating Humidity		35 ~ 85%RH	
Storage temperature range		-40 ~ 125°C	
Fuse		Thermal runaway fuse	
Connection type		T : Terminal type / L : Lead type	
Connection mode		Parallel connection type	
Wire size for connections		2.5mm²	4mm²
Response time		< 25 nano second	
Indicator LED	Green	Power lamp	
	Red	Fuse off at lamp on (이상시 램프'on')	
Weight (kg)		1.1	

*** Model type** T : Terminal Type, L : Lead wire Type

Dimension

- PB type -

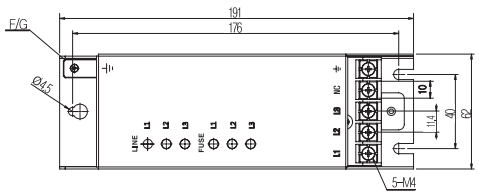

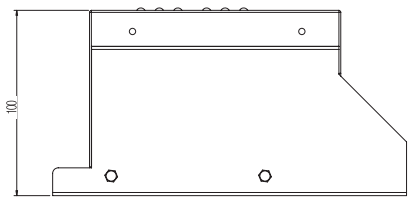

<Lead type>

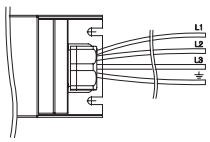

20kA-KIV insulation wire 2.5㎟
40kA-KIV insulation wire 4㎟

Line	Color	Lead
L1	Red	60cm
L2	White	60cm
L3	Blue	60cm
⏚	Green / Yellow	1m

- PD type -

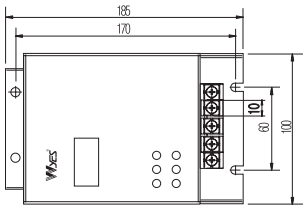

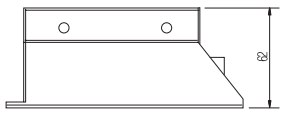

Terminal

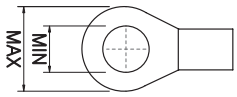

Max 9, Min 4

삼상접지 고급형(3P3W) 220V High quality type 80~240kA series

CE RoHS

Connection

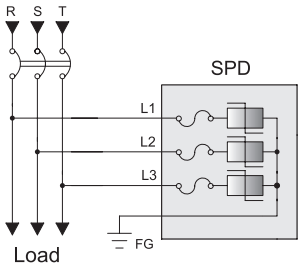

삼상접지
(3phase earthed type)

Specification

ITEM \ MODEL		WYPB3080T220/L220 WYPD3080T220/L220	WYPB3100T220/L220 WYPD3100T220/L220	WYPB3120T220/L220 WYPD3120T220/L220	WYPB3160T220/L220 WYPD3160T220/L220	WYPB3200T220/L220 WYPD3200T220/L220	WYPB3240T220/L220 WYPD3240T220/L220
Nominal voltage (Un)		Three phase 220VAC					
Max. continuous operating voltage (Uc)		320VAC					
Voltage protection level (Up)		〈2.1kV@20kV / 10kA (IEC61643－1)					
Rated frequency (Fo)		50 / 60Hz					
Max. discharge current (Imax)		80kA	100kA	120kA	160kA	200kA	240kA
Nominal discharge current (In)		40kA	50kA	60kA	80kA	100kA	120kA
Max. impulse current (Iimp)		–				12.5kA	
Protection level		Class II, III				Class I, II, III	
Protection mode		L－L, L－G					
Operating temperature range		－40 ~ 90°C					
Operating Humidity		35 ~ 85%RH					
Storage temperature range		－40 ~ 125°C					
Fuse		Thermal runaway fuse					
Connection type		T : Terminal type / L : Lead type					
Connection mode		Parallel connection type					
Wire size for connections		6mm²		10mm²			
Response time		〈 25 nano second					
Indicator LED	Green	Power lamp					
	Red	Fuse off at lamp on (이상시 램프'on')					
Weight (kg)		2.3					

*** Model type** T : Terminal Type, L : Lead wire Type

Dimension

- PB type -

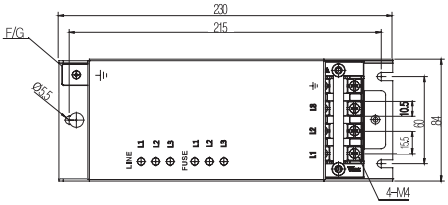

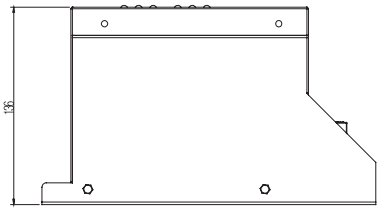

<Lead type>

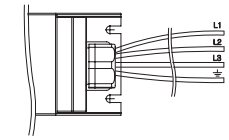

80/100kA-KIV insulation wire 6㎟
120/160/200/240kA-KIV insulation wire 10㎟

Line	Color	Lead
L1	Red	60cm
L2	White	60cm
L3	Blue	60cm
⏚	Green / Yellow	1m

- PD type -

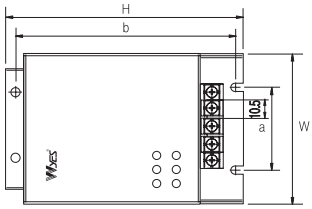

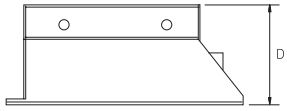

Type	W	H	D	a	b
80~100kA	120	190	70	70	175
120~240kA	135	230	84	70	215

Terminal

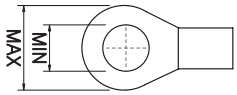

Max 10, Min 4

삼상접지 고급형(3P3W) 380, 440V High quality type 20/40kA series

CE RoHS

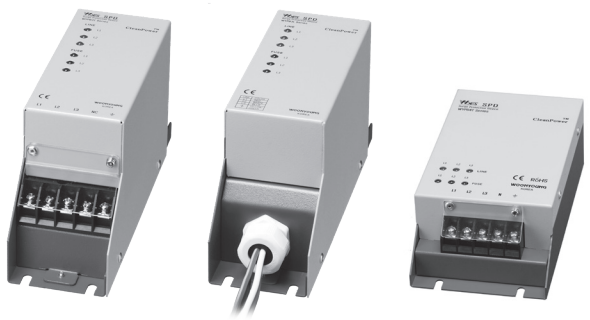

Connection

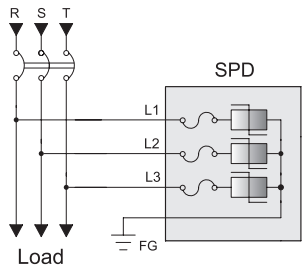

삼상접지
(3phase earthed type)

Specification

MODEL / ITEM		WYPB3020T380 / L380 WYPB3020T440 / L440 WYPD3020T380 / L380 WYPD3020T440 / L440	WYPB3040T380 / L380 WYPB3040T440 / L440 WYPD3040T380 / L380 WYPD3040T440 / L440
Nominal voltage (Un)		Three phase 380, 440VAC	
Max. continuous operating voltage (Uc)		460 / 625VAC	
Voltage protection level (Up)		〈 2.1kV@20kV / 10kA (IEC61643－1)	
Rated frequency (Fo)		50 / 60Hz	
Max. discharge current (Imax)		20kA	40kA
Nominal discharge current (In)		10kA	20kA
Max. impulse current (Iimp)		–	
Protection level		Class II, III	
Protection mode		L－L, L－G	
Operating temperature range		－40 ～ 90°C	
Operating Humidity		35 ～ 85%RH	
Storage temperature range		－40 ～ 125°C	
Fuse		Thermal runaway fuse	
Connection type		T : Terminal type / L : Lead type	
Connection mode		Parallel connection type	
Wire size for connections		2.5mm²	4mm²
Response time		〈 25 nano second	
Indicator LED	Green	Power lamp	
	Red	Fuse off at lamp on (이상시 램프'on')	
Weight (kg)		1.1	

*** Model type** T : Terminal Type, L : Lead wire Type

Dimension

- PB type -

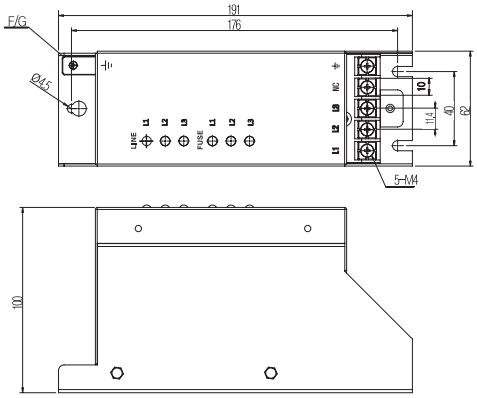

<Lead type>

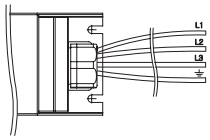

20kA-KIV insulation wire 2.5㎟
40kA-KIV insulation wire 4㎟

Line	Color	Lead
L1	Red	60cm
L2	White	60cm
L3	Blue	60cm
⏚	Green / Yellow	1m

- PD type -

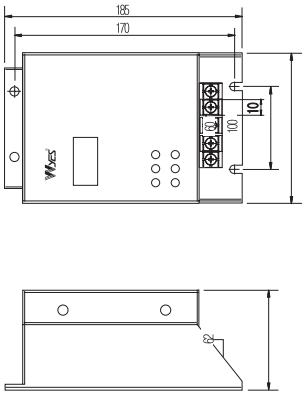

Terminal

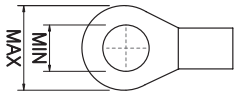

Max 9, Min 4

삼상접지 고급형(3P3W) 380, 440V High quality type 80~240kA series

CE RoHS

Connection

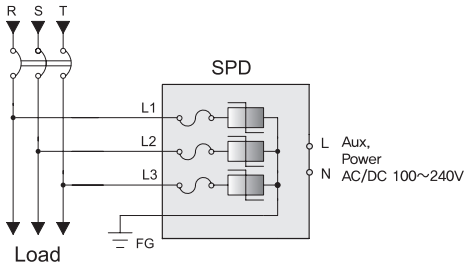

삼상접지
(3phase earthed type)

Specification

ITEM \ MODEL		WYPB3080T380/L380 WYPB3080T440/L440 WYPD3080T380/L380 WYPD3080T440/L440	WYPB3100T380/L380 WYPB3100T440/L440 WYPD3100T380/L380 WYPD3100T440/L440	WYPB3120T380/L380 WYPB3120T440/L440 WYPD3120T380/L380 WYPD3120T440/L440	WYPB3160T380/L380 WYPB3160T440/L440 WYPD3160T380/L380 WYPD3160T440/L440	WYPB3200T380/L380 WYPB3200T440/L440 WYPD3200T380/L380 WYPD3200T440/L440	WYPB3240T380/L380 WYPB3240T440/L440 WYPD3240T380/L380 WYPD3240T440/L440
Nominal voltage (Un)		Three phase 380, 440VAC					
Max. continuous operating voltage (Uc)		460 / 625VAC					
Voltage protection level (Up)		〈 2.1kV@20kV / 10kA (IEC61643－1)					
Rated frequency (Fo)		50 / 60Hz					
Max. discharge current (Imax)		80kA	100kA	120kA	160kA	200kA	240kA
Nominal discharge current (In)		40kA	50kA	60kA	80kA	100kA	120kA
Max. impulse current (Iimp)		–				12.5kA	
Protection level		Class II, III				Class I, II, III	
Protection mode		L－L, L－G					
Operating temperature range		－40 ~ 90°C					
Operating Humidity		35 ~ 85%RH					
Storage temperature range		－40 ~ 125°C					
Fuse		Thermal runaway fuse					
Connection type		T : Terminal type / L : Lead type					
Connection mode		Parallel connection type					
Wire size for connections		6mm²		10mm²			
Response time		〈 25 nano second					
Indicator LED	Green	Power lamp					
	Red	Fuse off at lamp on (이상시 램프'on')					
Weight (kg)		2.3					

*** Model type** T : Terminal Type, L : Lead wire Type

Dimension

- PB type -

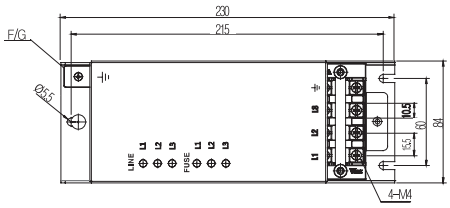

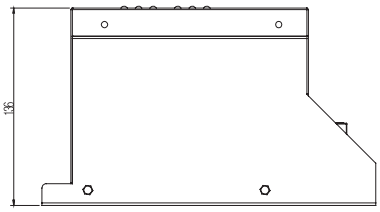

<Lead type>

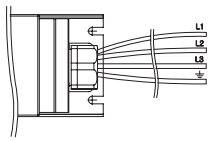

80/100kA-KIV insulation wire 6㎟
120/160/200/240kA-KIV insulation wire 10㎟

Line	Color	Lead
L1	Red	60cm
L2	White	60cm
L3	Blue	60cm
⏚	Green / Yellow	1m

- PD type -

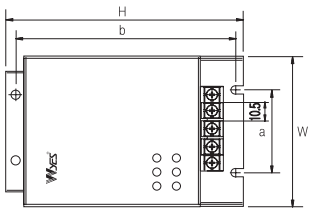

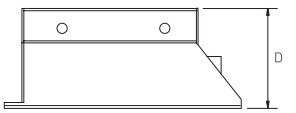

Type	W	H	D	a	b
80~100kA	120	190	70	70	175
120~240kA	135	230	84	70	215

Terminal

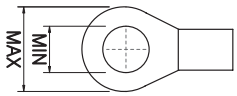

Max 10, Min 4

삼상N접지 고급형(3P4W) 380V High quality type 20/40kA series

CE RoHS

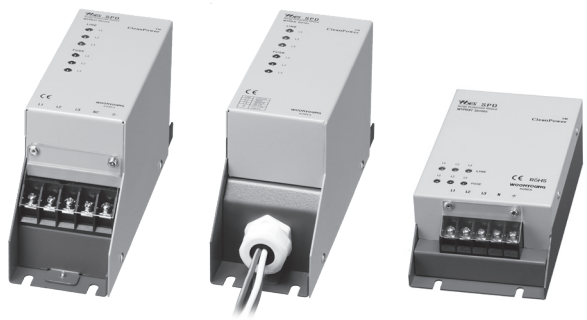

Connection

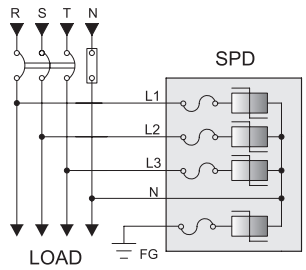

삼상N접지
(3phase N-earthed type)

Specification

ITEM \ MODEL		WYPB4020T380 / L380 WYPD4020T380 / L380	WYPB4040T380 / L380 WYPD4040T380 / L380
Nominal voltage (Un)		Three phase 380VAC	
Max. continuous operating voltage (Uc)		640VAC	
Voltage protection level (Up)	L-N, N-G	〈1.2kV@20kV / 10kA (IEC61643－1)	
	L-L, L-G	〈2.1kV@20kV / 10kA (IEC61643－1)	
Rated frequency (Fo)		50 / 60Hz	
Max. discharge current (Imax)		20kA	40kA
Nominal discharge current (In)		10kA	20kA
Max. impulse current (Iimp)		–	
Protection level		Class II, III	
Protection mode		L－L, L－G	
Operating temperature range		－40 ～ 90°C	
Operating Humidity		35 ～ 85%RH	
Storage temperature range		－40 ～ 125°C	
Fuse		Thermal runaway fuse	
Connection type		T : Terminal type / L : Lead type	
Connection mode		Parallel connection type	
Wire size for connections		2.5mm²	4mm²
Response time		〈 25 nano second	
Indicator LED	Green	Power lamp	
	Red	Fuse off at lamp on (이상시 램프'on')	
Weight (kg)		1.1	

*** Model type** T : Terminal Type, L : Lead wire Type

Dimension

- PB type -

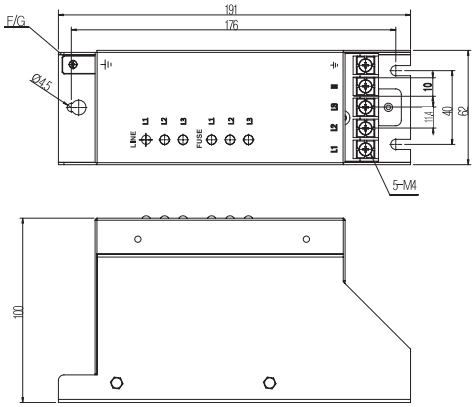

<Lead type>

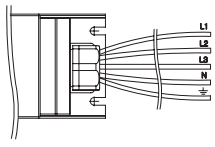

20kA-KIV insulation wire 2.5㎟
40kA-KIV insulation wire 4㎟

Line	Color	Lead
L1	Red	60cm
L2	White	60cm
L3	Blue	60cm
N	Black	60cm
⏚	Green / Yellow	1m

- PD type -

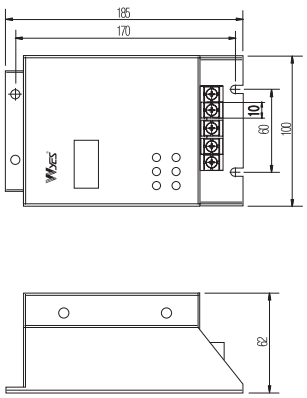

Terminal

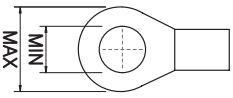

Max 9, Min 4

삼상N접지 고급형(3P4W) 380V High quality type 80~240kA series

CE RoHS

Connection

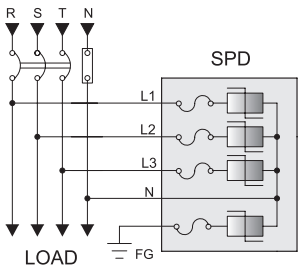

삼상N접지
(3phase N-earthed type)

Specification

ITEM \ MODEL		WYPB4080T380/L380 WYPD4080T380/L380	WYPB4100T380/L380 WYPD4100T380/L380	WYPB4120T380/L380 WYPD4120T380/L380	WYPB4160T380/L380 WYPD4160T380/L380	WYPB4200T380/L380 WYPD4200T380/L380	WYPB4240T380/L380 WYPD4240T380/L380
Nominal voltage (Un)		Three phase 380VAC					
Max. continuous operating voltage (Uc)		640VAC					
Voltage protection level (Up)	L-N, N-G	〈1.2kV@20kV / 10kA (IEC61643－1)					
	L-L, L-G	〈2.1kV@20kV / 10kA (IEC61643－1)					
Rated frequency (Fo)		50 / 60Hz					
Max. discharge current (Imax)		80kA	100kA	120kA	160kA	200kA	240kA
Nominal discharge current (In)		40kA	50kA	60kA	80kA	100kA	120kA
Max. impulse current (Iimp)		–				12.5kA	
Protection level		Class II, III				Class I, II, III	
Protection mode		L－L, L－G					
Operating temperature range		－40 ~ 90°C					
Operating Humidity		35 ~ 85%RH					
Storage temperature range		－40 ~ 125°C					
Fuse		Thermal runaway fuse					
Connection type		T : Terminal type / L : Lead type					
Connection mode		Parallel connection type					
Wire size for connections		6mm²		10mm²			
Response time		〈 25 nano second					
Indicator LED	Green	Power lamp					
	Red	Fuse off at lamp on (이상시 램프'on')					
Weight (kg)		2.3					

*** Model type** T : Terminal Type, L : Lead wire Type

Dimension

- PB type -

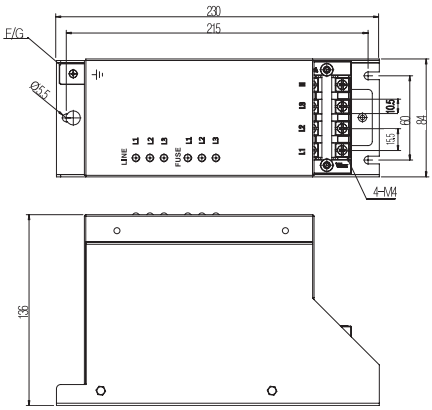

<Lead type>

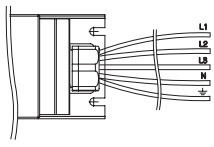

80/100kA-KIV insulation wire 6㎟
120/160/200/240kA-KIV insulation wire 10㎟

Line	Color	Lead
L1	Red	60cm
L2	White	60cm
L3	Blue	60cm
N	Black	60cm
⏚	Green / Yellow	1m

- PD type -

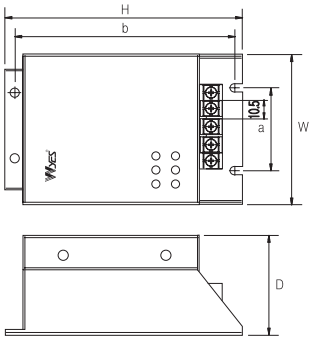

Type	W	H	D	a	b
80~100kA	120	190	70	70	175
120~240kA	135	230	84	70	215

Terminal

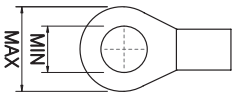

Max 10, Min 4

삼상N접지 고급형(3P4W) 480V High quality type 80kA series

CE RoHS

Connection

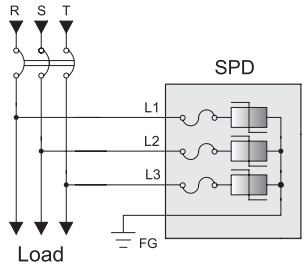

삼상접지
(3phase earthed type)

Specification

ITEM \ MODEL		WYPB3080T480
Nominal voltage (Un)		480VAC
Max. continuous operating voltage (Uc)		625VAC
Voltage protection level (Up)		< 2.1kV@20kV / 10kA (IEC61643-1)
Rated frequency (Fo)		50 / 60Hz
Max. discharge current (Imax)		80kA
Nominal discharge current (In)		40kA
Max. impulse current (Iimp)		-
Protection level		Class II, III
Protection mode		L-L, L-G
Operating temperature range		-40 ~ 90°C
Operating Humidity		35 ~ 85%RH
Storage temperature range		-40 ~ 125°C
Fuse		Thermal runaway fuse
Connection type		T : Terminal type / L : Lead type
Connection mode		Parallel connection type
Wire size forconnections		6mm²
Response time		< 25 nano second
Indicator LED	Green	Power lamp
	Red	Fuse off at lamp on (이상시 램프'on')
Weight (kg)		2.3

Dimension

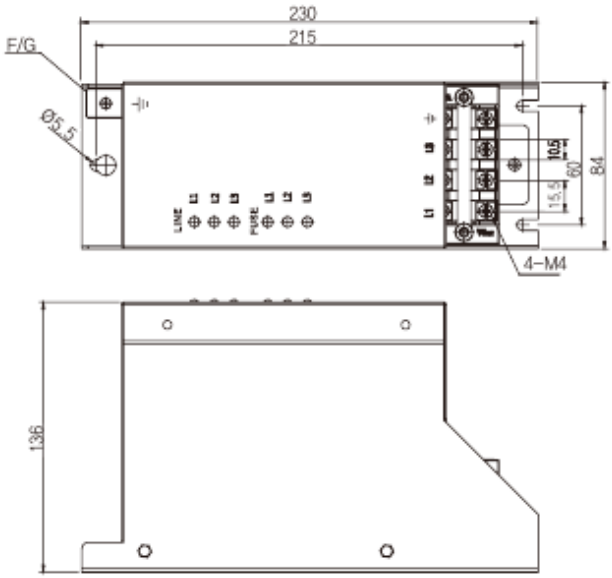

삼상접지 고급형 380/440V High quality type 12.5kA series (태양광/ESS)

CE RoHS

태양광
ESS

Connection

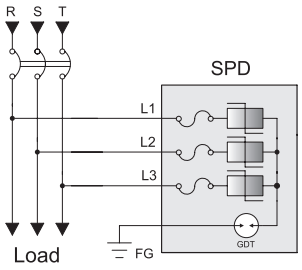

삼상접지
(3phase earthed type)

Specification

ITEM \ MODEL		WYPD3125T380	WYPD3125T440
Nominal voltage (Un)		Three phase 380VAC	Three phase 440VAC
Max. continuous operating voltage (Uc)		L−L : 560VAC, L−PE : 900VAC	L−L : 650VAC, L−PE : 900VAC
Voltage protection level (Up)		<2.5kV@20kV / 10kA (IEC61643−1)	<2.5kV@20kV / 10kA (IEC61643−1)
Rated frequency (Fo)		50/60Hz	
Max. impulse current (Iimp 10/350μs)		12.5kA	
Short-circuit Current Rating I (SCCR)		25kA	
Protection level		Class I	
Protection mode		L−L, L−PE	
Operating temperature range		−40 ~ 90°C	
Operating Humidity		35 ~ 85%RH	
Storage temperature range		−40 ~ 125°C	
Fuse		Thermal runaway fuse	
Connection type		Terminal type	
Connection mode		Parallel connection type / Wall Mounting	
Wire size for connections		16mm²	
Response time		< 25 nano second	
Indicator LED	Green	Power lamp	
	Red	Fuse off at lamp on (이상시 램프'on')	
Weight (kg)		2.3	

Dimension

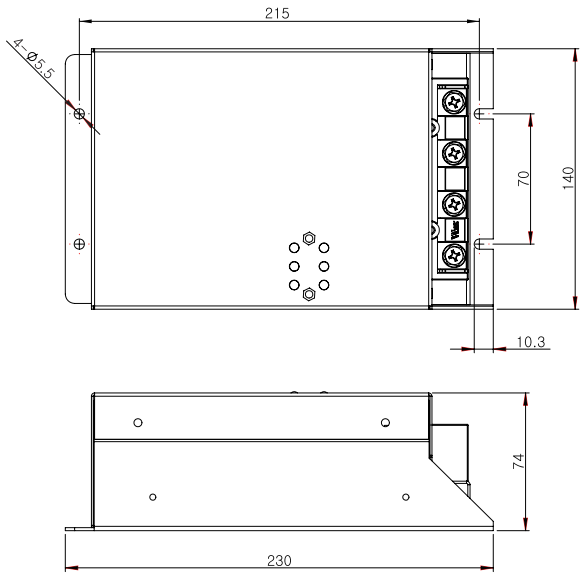

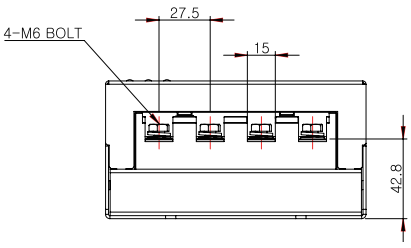

Terminal

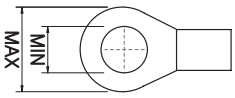

Max 10, Min 4

스파크킬러 Spark killer

CE RoHS

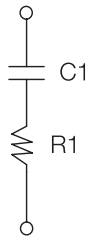

<Circuit>

Model	WYK1201T
Rated voltage	AC 380V / 440V
Capcitor C1	0.1uF
Resistor R1	120Ω
Operating temperature	−25 ~ +70°C
Weight	40g

●스파크킬러의 용도

-장치 내의 전기계를 기계계로 변환할 때 전자기계 기구부품을 이용하는 경우가 많은데 이때는 코일에 의한 인덕턴스 때문에 큰 에너지의 펄스역전압이 발생한다. 일반적으로 회로에 접점이 개폐될 경우 그 접점에 전압이 있으면 접점이 닫힐 때 전류가 흐르고 열릴 때는 인덕턴스에서 역기전력에 의해 전압이 발생하며 불꽃과 함께 글로우 ARC 등이 발생하여 고주파 진동이 일어나 전자회로 에 방해를 주는 원인이 된다.
접점은 불꽃때문에 변형, 융착 되며 표면에 산화 접촉 저항증가, 접촉불량 등으로 점점 수명을 단축시키게 된다.
이 불꽃 발생을 방지하기 위해 접점간에 삽입하는 회로를 불꽃 소거회로라고 하며 여기에 삽입하는 부품을 SPARK KILLER라고 한다.

●특징

1. 과부하 내력이 크다.
2. 채터링 등 접점 진동에 의한 서지 전압에 대해 효과가 크다.
3. 외부 서지 전압에 효과가 크다.
4. 고 역주파수에 대해 임피던스가 아주 적어 저레벨의 고주파 잡음에 대해 억제력이 있다.
5. SCR, SSR 등의 보호 및 dv/dt의 개선용으로 CR 시정수를 갖는데 효과가 크다.

●Use of a spark killer

-When converting an electrical system into a mechanical system in a device, electro-mechanical mechanism components are often used, which generates a pulse reverse voltage of large energy due to the inductance of a coil at this time. Generally, if a voltage is applied to acontact when the contact in a circuit is opened/closed, then when the contact is closed, electric currents flow, and when the contact is opened, its inductance generates a voltage, spark, glow arc, etc. via areverse electromotive force to cause a high-frequency vibration, resulting in hindrance to the electronic circuits.
The contact is consumed,deformed and welded due to a spark, shortening the lifetime of the contact due to an increase in oxidation contact resistance on the surface, inferior contact, etc.
A circuit inserted between contacts to prevent the generation of this spark is called a spark removal circuit, and a component inserted into this is called a spark killer.

●Feature

1. Has a bearing capacity against overloads.
2. Has a large effect on a surge voltage due to contact vibrations such as chattering, etc.
3. Has a large effect on an external surge voltage.
4. Has a suppression force against low-level highfrequency noises due to its very low impedance against high reverse frequency.
5. Has an effect on having a CR time constant for protection of SCR, SSR, etc. and improvement of dv/dt.

●사용 예 (Use example)

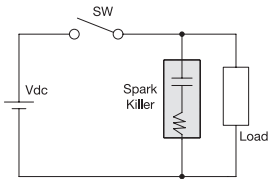

DC circuit

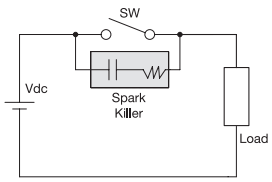

AC/DC circuit

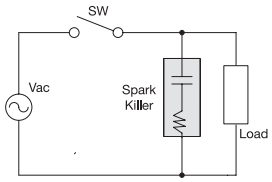

AC circuit

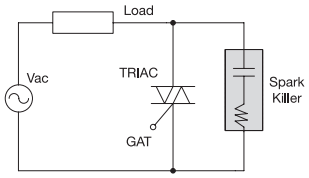

Phase control circuit

● Dimension

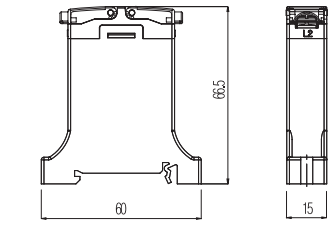

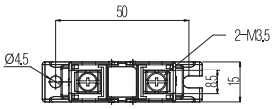

● Terminal

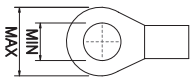

Max 8, Min 3.5

⚠ 주 의 [Spark killer & Surge killer]

1. 최대한 노이즈 등의 발생원 근처에 부착하십시오.
2. 배선의 L(리액턴스) 성분에 의해 이상 진동을 일으키기도 하고, 고주파성분에 대해서는 임피던스의 상승에 의해 흡수 효과가 저하될 수도 있습니다.
3. 규정의 펄스조건을 준수하여 주십시오. 특히 전원 주파수가 높을 경우 (70Hz 이상)와 겹칠 때는 3상 전파정류 회로 등에서는 주의하여 주십시오.
체크방법으로 부품의 온도상승이 5°C 이하로 되면 안전합니다.
4. 본 제품의 품질 향상을 위하여 색상 및 일부 디자인은 사전 통보 및 예고 없이 변경될 수도 있습니다.

⚠ Caution [Spark killer & Surge killer]

1. Attach this near a generation source of noises, etc. as far as possible.
2. Abnormal vibrations may be caused by the L(reactance) components of wiring, etc., and the absorption effect may be reduced by an increase in impedance for high-frequency components.
3. Observe the prescribed impulse conditions. Especially, when the power frequency is high(70Hz or higher) or when overlapped, take care in a 3-phase electromagnetic wave rectification circuit, etc. As a checking method, a 5℃ or less temperature rise in components is safe.
4. Colors and some designs are subject to changes without prior notification or notice to improve the quality of this product.

서지킬러 Surge killer

CE RoHS

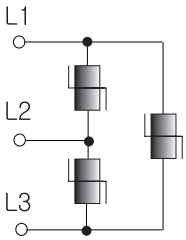

<Circuit>

Model	WYK1201T
Nominal voltage	AC 380V
Varistor	20D102
Max. continuous operating voltage	AC625V / DC825V
Weight	0.1kg

●서지킬러의 용도

-과전압이나 유도전파에 의한 급격한 펄스를 막는 부품이며 주로 제품의 입력 즉 신호를 받는 측에 사용한다.
적용범위는 다음과 같다

- 각종 반도체 (다이오드, 싸이리스터, 트랜지스터, IC 등)의 과전압으로부터 보호
- 릴레이 과전압 방지 및 접점 보호
- 계측기, 제어기기, 통신, 방송기기 등의 유도전파에 의한 서지보호
- 가전제품, 음향기기 등의 유도전파의 의한 개폐서지 보호

●특징

1. 응답성이 뛰어나며 급격한 펄스 전압도 흡수 가능합니다.
2. 제한 전압 특성이 우수합니다.
3. 서지흡수 능력이 큽니다 .
4. 전압, 전류 특성이 대칭으로 되어 있을 뿐 아니라 +극 또는 -극성 서지를 같은 성능으로 흡수합니다.
5. 정격전력이 크고 신뢰성이 높습니다.

●Use of a surge killer

-This is a component to prevent a sudden pulse due to overvoltage or guided electromagnetic wave, which is mainly used at the input side of a product, i.e. at the signal receiving part of a product. Its scope of application is as follows:

· Protection of various semiconductors(diode, thyristor, transistor, IC, etc.) from overvoltage.
· Protection of relays and contacts from overvoltage.
· Protection of meters, controllers,communication/broadcasting devices, etc. from a surge due to guided waves.
· Protection of home appliances, audio device, etc. from a opening/closing surge due to guided waves.

●Feature

1. Has an outstanding response property and can absorb even a sudden pulse voltage.
2. Has a limited voltage characteristic.
3. Has a large surge absorption ability.
4. Is symmetrical in voltage and current characteristics and absorbs the + or - polarity surge in the same performance.
5. Has a large rated power and has high reliability.

●사용 예 (Use example)

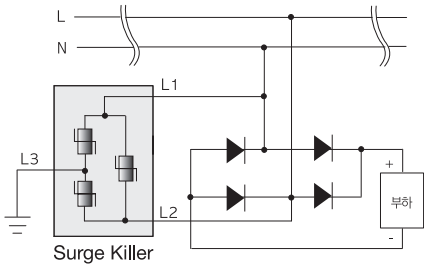

AC 1Ø circuit

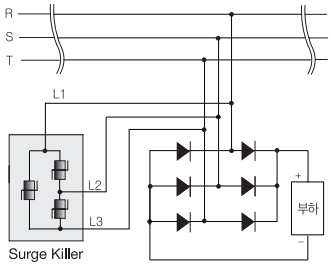

AC 3Ø circuit

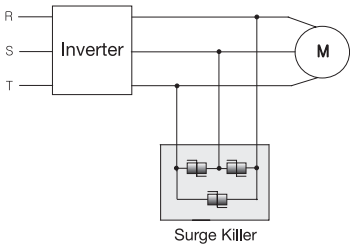

Inverter output

● Dimension

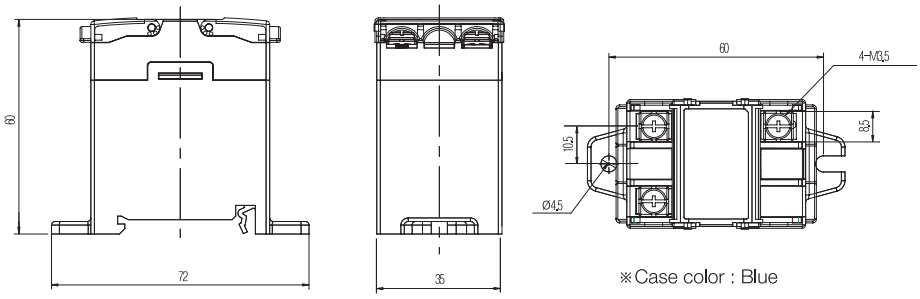

※Case color : Blue

● Terminal

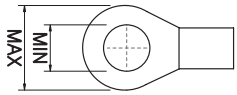

Max 8, Min 3.5